Status of the CLIC crab cavity

P. K. Ambattu, G. Burt, B. Woolley, A. Dexter
(Cockcroft Institute / Lancaster University)
V. Dolgashev (SLAC)
A. Grudiev, V. Soldatov, G. Riddone, I. Syratchev (CERN)

3rd ICFA Mini-Workshop on Deflecting/Crabbing RF Cavity Research and application in Accelerators, Lanzhou, China, 18-21 July 2012

Outline

- CLIC crab cavity activities in the uk
- The CLIC crab cavity
- Cavity technology
- Coupler options
- Monopole free coupler designs
- Prototypes designed, built
- LLRF phase control
- Conclusions

CLIC crab cavity activities

EUCARD1 TASKS REMAINING

- Gradient tests of a cell design excited in a dipole mode at SLAC
  - (Cavity being measured in Daresbury Lab, before sending down to SLAC)
- Manufacture a multi-cell un-damped cavity for high power tests at CERN
  - (Disc manufacture finished, initial RF test to be commenced at CERN)
- Complete phase measurement sampling electronics
  - (Will complete by August)

NEW CERN PROJECT

- Development of a damped structure with racetrack / elliptical cells
  - (on going)
- Engineering design work to enable prototype cavities to be tests at CERN
  - (cooling, vacuum, mounting, instrumentation etc.)
- Experiments to understand stability of the RF distribution system
  - (PhD project starting with RF measurements on CTF3)
- R&D as necessary to improve stability of RF distribution system
  - (Some new ideas to present)

The CLIC crab cavity

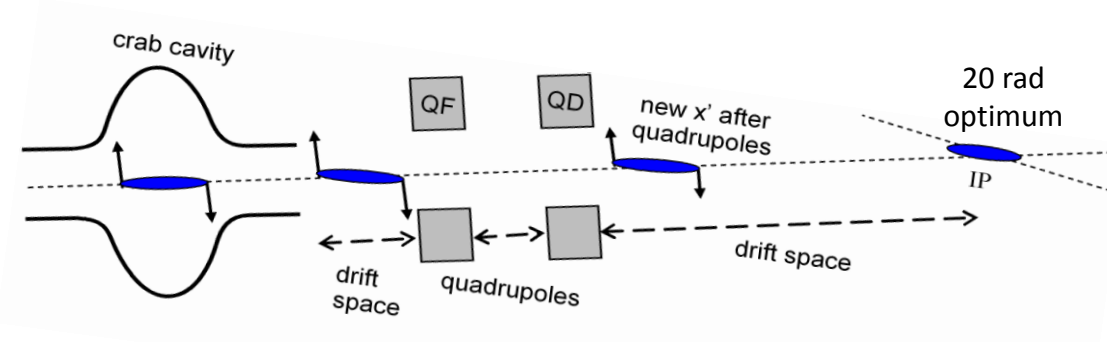

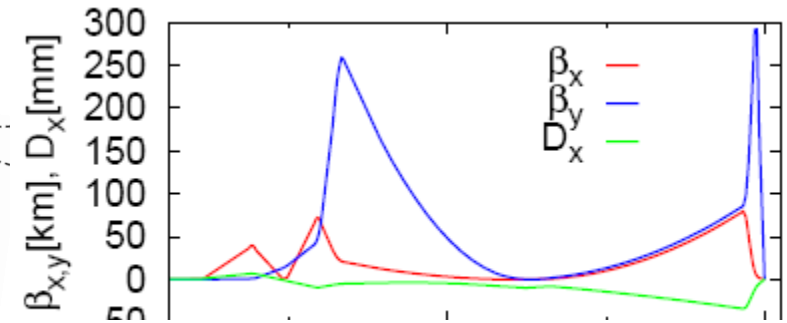

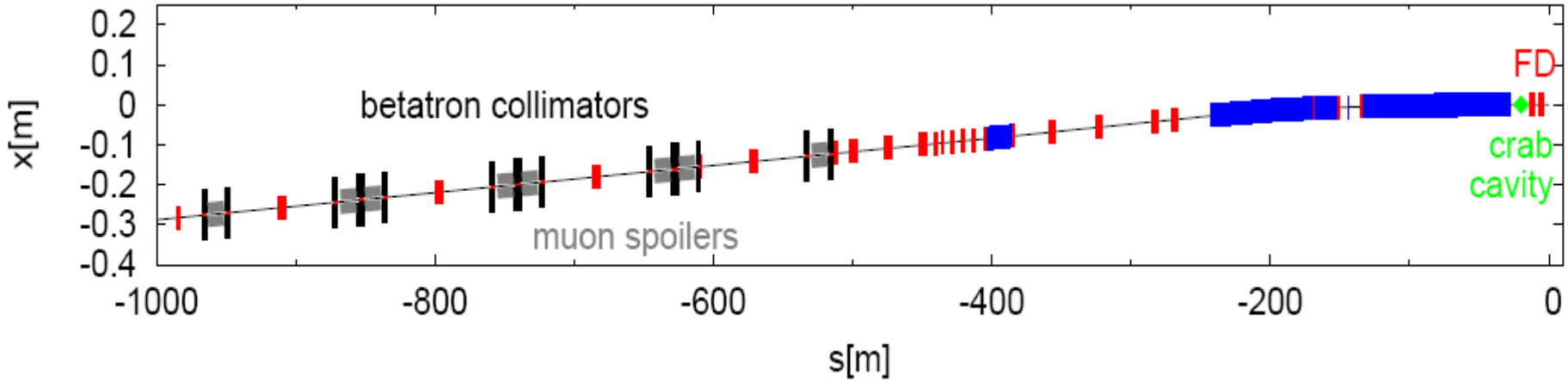

- Transverse beam size at IP=1 nm x 45 nm, needs strong focusing by the final quads (high beta functions)
- Tight amplitude and phase tolerances due to the tiny beam size
- Crab cavity location is close to this final focus hence very sensitive to kicks by transverse wakefield in the cavity

Cavity errors and luminosity

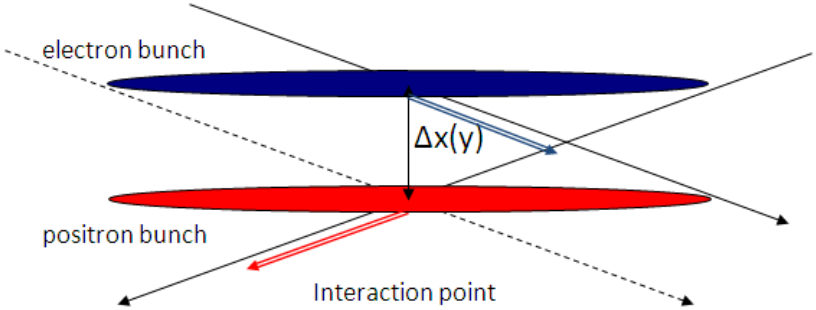

- The crab cavity will reduce luminosity in the presence of phase errors between the cavities by a factor,

$$S = \exp\left(-\frac{\Delta x(y)_{IP}^{2}}{4\sigma_{x(y)}^{*2}}\right)$$

- Horizontal offsets can occur from RF phase error, should be < 18 m deg for S=98 % → *Needs accurate LLRF*

- Horizontal offset can also occur from horizontal wakefields

- But vertical wakefields are more dangerous →*Need heavy wakefield damping, Q~100 for same order mode*

Technology

- CLIC crab cavity is chosen to be travelling wave type, as a high power flow, or group velocity is preferred for fast LLRF control of field errors
- Standing wave solution was not sought because of anticipated phase control difficulties of the π mode
- X-band, 12 GHz is chosen as operating frequency to make use of the test facilities at CERN/SLAC
- Lower voltage requirement per beam and higher RF phase tolerance than S-band
- For the CLIC crossing angle of 20 mrad, a kick of 2.55 MV per beam is required
- About 12 cells are found optimum for a beampipe radius of 5 mm, needing 13 MW per beam
- Racetrack cell shape is chosen to detune the same order mode by 1 GHz
- CTF3 prototype will also include wakefield dampers for beam test

Crab cavity vs main linac cavity

1. Crab cavity has lower power requirement for a given beam energy as force applied is perpendicular to the beam velocity. For CLIC crab cavity, 15 MW per 12 cell structure, for CLIC main linac cavity, 61.3 MW/26 cell structure

   → *number of Klystrons (rated 50 MW peak, 12 GHz)*
   → Low surface fields: CC: 100 MV/m vs LC: 230 MV/m,CC: 26 K x LC: 47 K
   → *less breakdown probability*

2. Deflecting dipole field pattern is different from accelerating monopole field pattern, hence different locations of E and B fields on the surface
   →*Low field regions around equator to put coupling slots*

3. These two make crab cavity design less stringent than accelerating cavity design with simpler cell shape
   → *high power RF design is less difficult*

4. In crab cavity, cavity-to-cavity phase jitter < 18 mdeg. In main linac cavity, phase jitter mainly causes energy spread which is less critical
   → *complicated low level RF design*

Racetrack cell shape

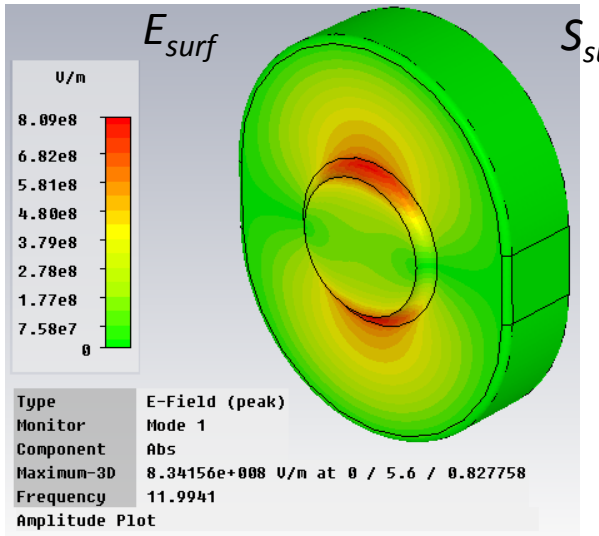

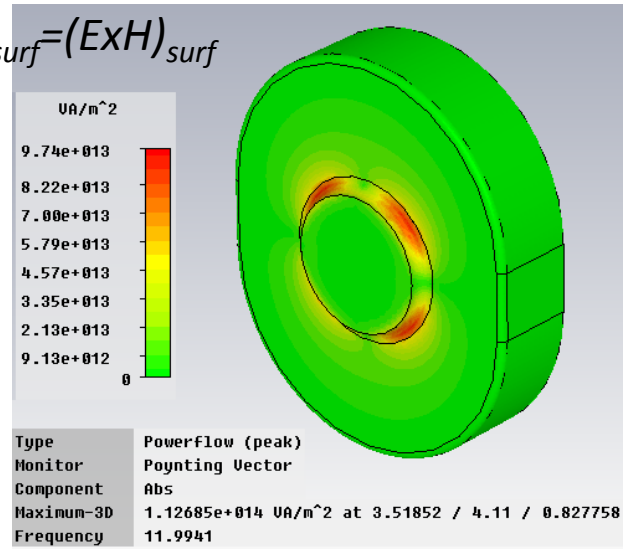

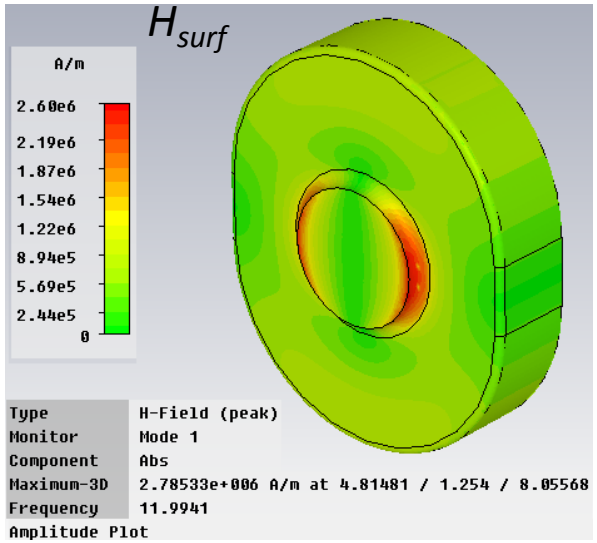

Property	Value
Energy stored, J	1
Q_{Cu}	6395
R_t/Q, Ohm	54.65
v_{gr}, %	-2.92
E_{surf}/E_t	3.43
H_{surf}/E_t	0.0114
S_c (W/μm^2)	3.32

- Peak electric and magnetic fields are located 90 degrees from each other on the iris
- Surface Poynting flux S_{surf} is however at 45 deg to both E and H
- The cavity has relatively low E and H fields at the surface but high Sc close to the limit~5 W/μm^2 CERN predicted for linacs
- Location of the breakdown damage on the iris could provide vital information on the cause of breakdown mechanism

Main linac cell shape,
A. Grudiev et.al

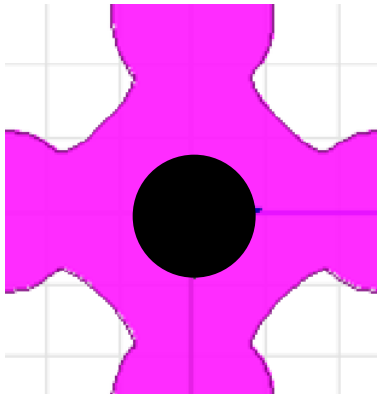

Crab cavity kick

- Kick is mainly electric for large beampipe and mainly magnetic for small beampipe cavities
- For CLIC with 5mm radius at 12 GHz, it is a combination of both
- There are strong transverse electric field Ey in the iris and transverse magnetic field Hx in the cell centre
- Being a travelling wave cavity, E_y and B_x are in phase
- Total transverse kick = $E_y(z)+cB_x(z)$ or $(c/w)*dEz(z)/dy$ V/m

E_y

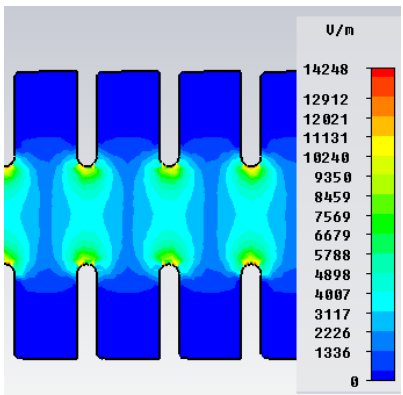

H_x

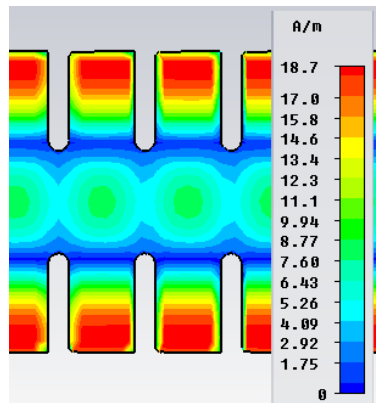

at Pin~13 MW, 12 cell structure kick,

Lorentz force: 2.55 MV
Panofsky-Wenzel: 2.5514 MV

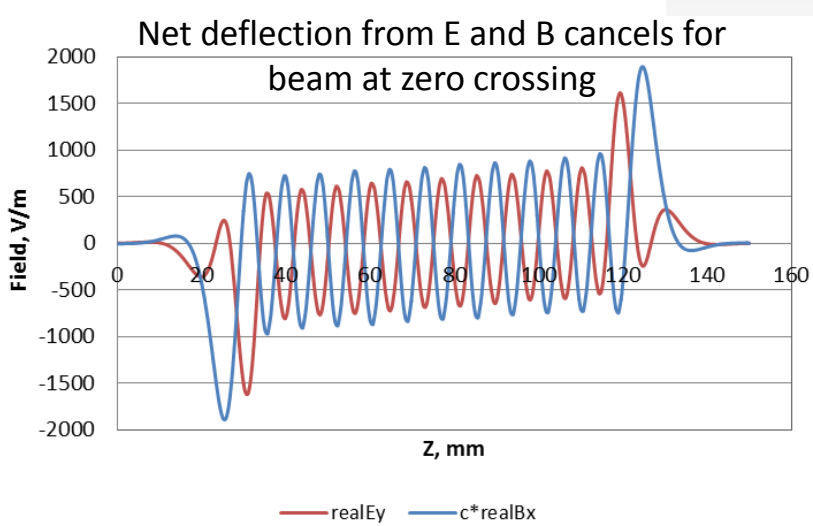

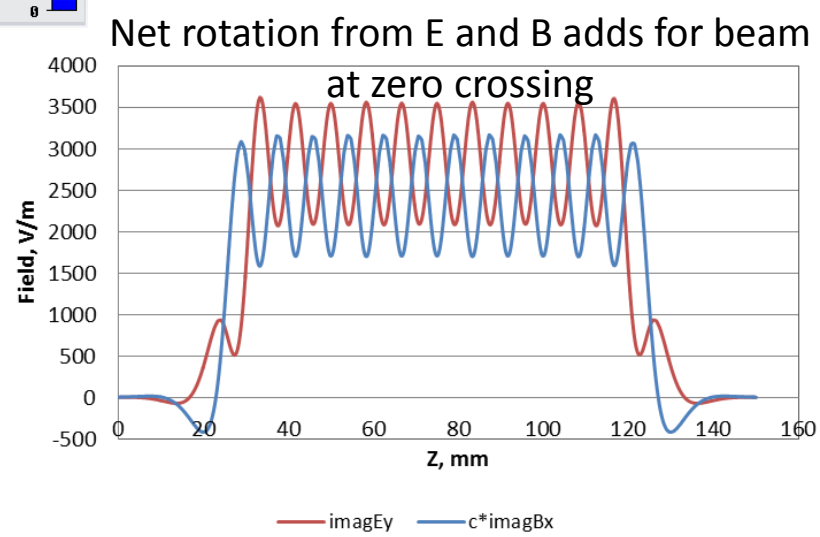

Power coupler options

- Well-known coupling options are,

Magnetic / standard / compact coupler

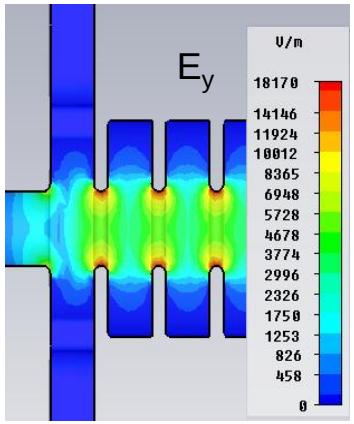

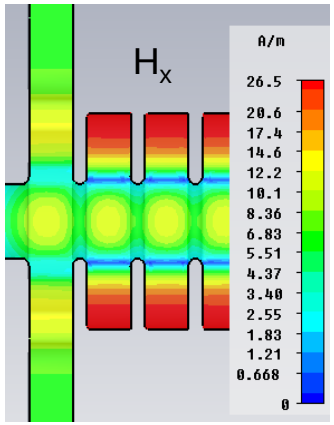

Resonant / waveguide / low field (acc) coupler

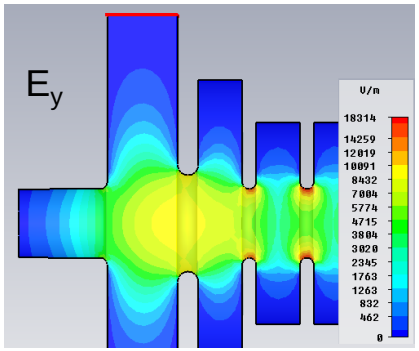

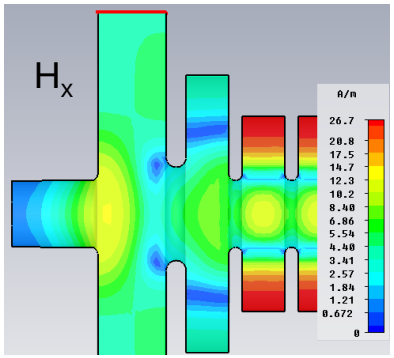

Mode launcher / broadband coupler

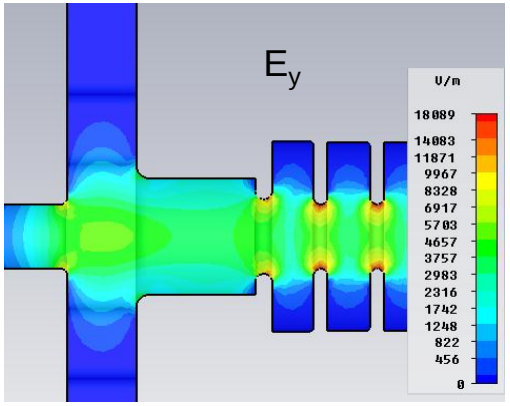

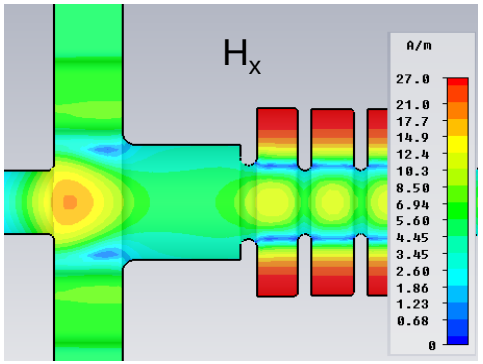

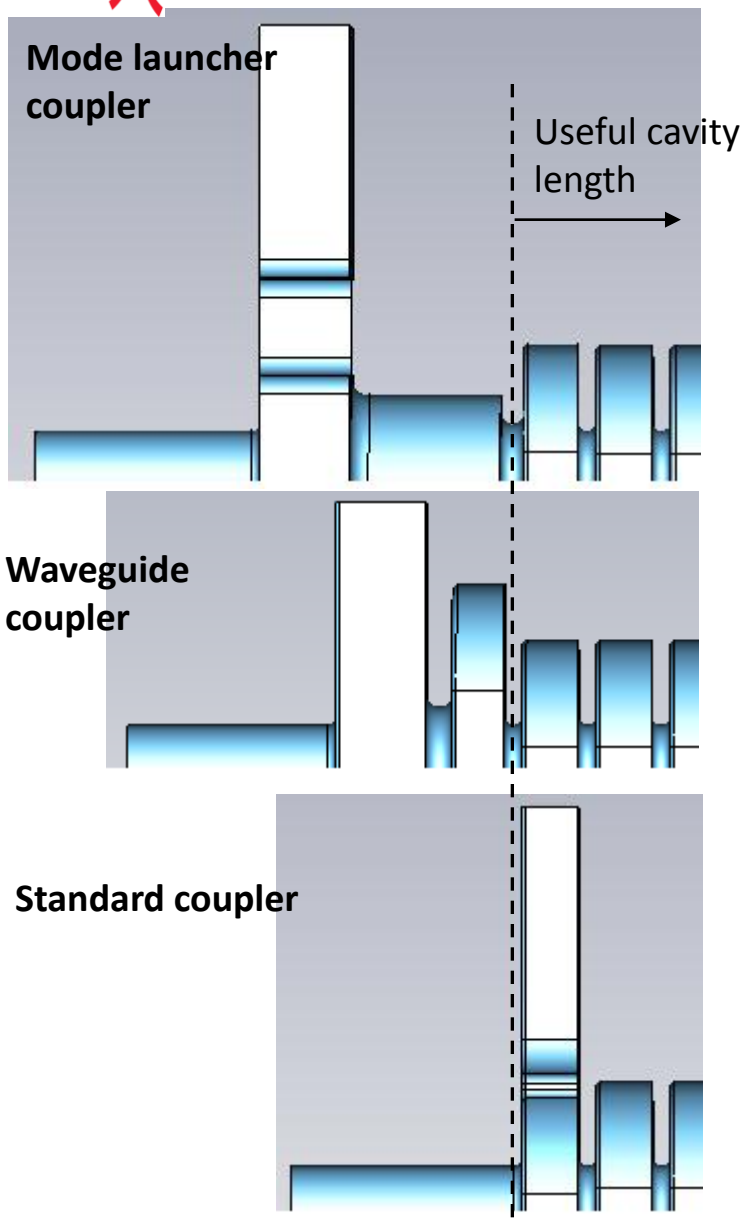

Surface fields for 12 cells, 2.55 MV kick

Coupler type	E_{surf}, MV/m	H_{surf}, kA/m
Mode launcher	102	339
Waveguide	100	339
Standard	102	332

- coupler type doesn't make a difference in the surface fields
- Because peak fields lie on the irises for a dipole cavity
- So performance is not limited by the coupler heating
- Longitudinal compactness is higher for standard coupler
- Transverse compactness depends on coupler topology - dual feed or single feed

Symmetric or dual-feed coupler

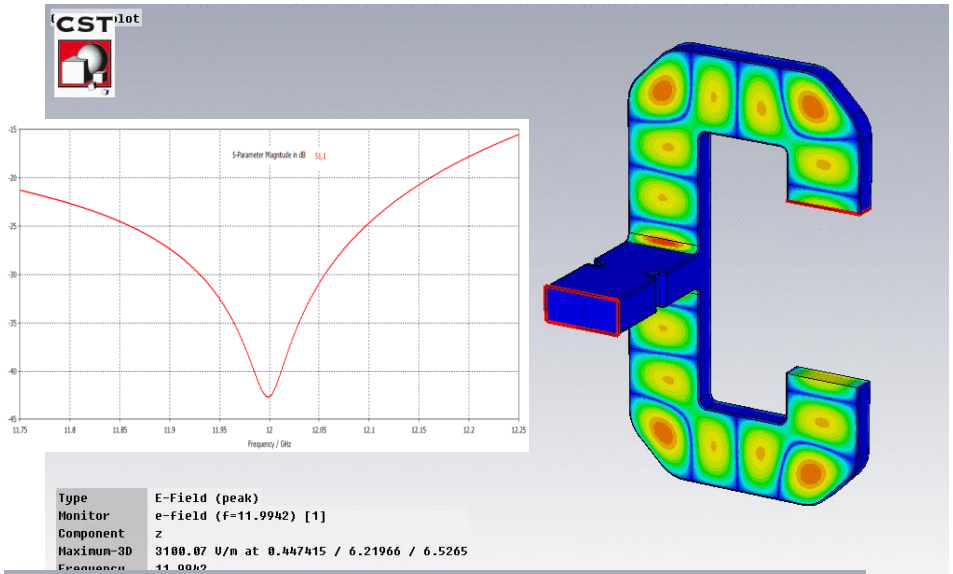

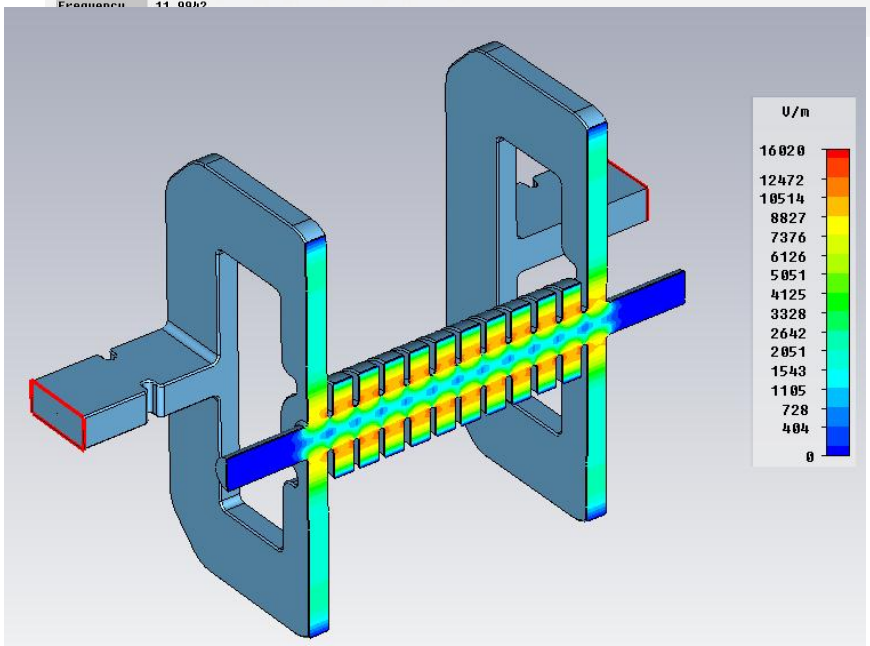

- Dual-feed needs to split power at 180^0 between the ports
- The splitter increases the transverse size of the cavity
- Makes cell tuning difficult, especially in the presence of damping waveguides
- Advantage is that no coupler induced monopole component due to symmetry of the fields
- This demands additional requirement of field stabilisation between the arms

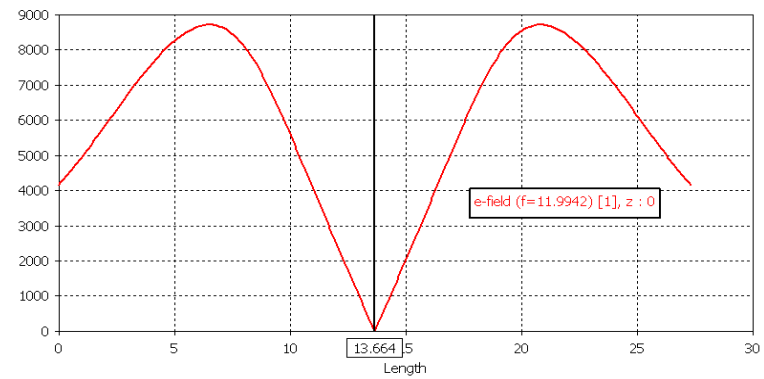

mag{Ez(y)} in the end cell showing zero monopole component

Asymmetric or single-feed coupler

- Avoids the splitter hence more compact and easy handing
- Inclusion of damping waveguides, frequency tuning etc are easier
- But the asymmetry of the coupler induces multipole components, especially monopole

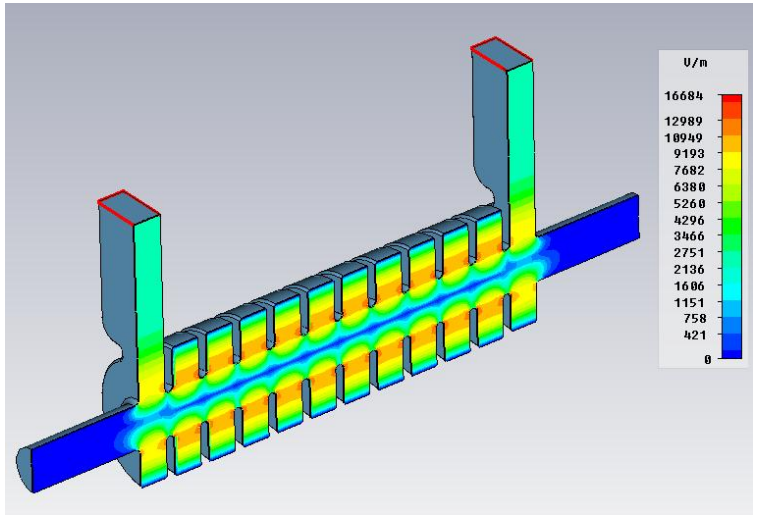

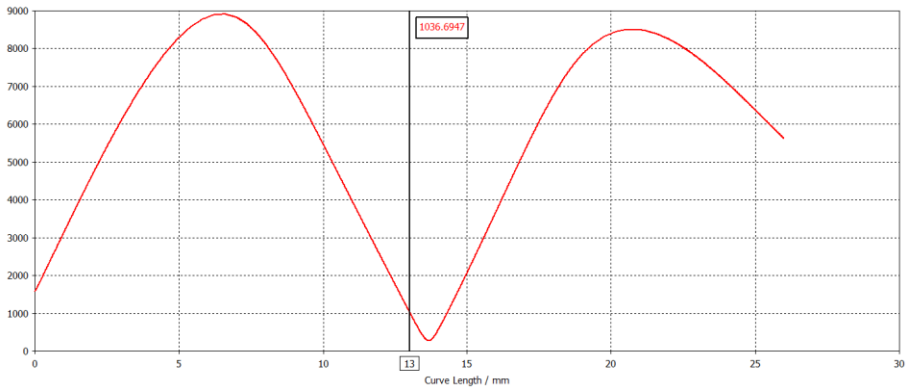

Multipole components

$$E_z(r,\theta,z) = \sum_m E_{zm}(z) r^m \cos(m\theta)$$

Component	Dual-feed, V/mm^m	Single-feed, V/mm^m
Monopole (m=0)	8.2723e-007 +1.1753e-006i	-11.9908 + 0.0041i
Dipole (m=1)	1.2716e+002 - 2.4067e-004i	1.2714e+002 +3.0093e-004i
Quadrupole (m-2)	-6.4563e-008 - 3.8632e-007i	0.1188 - 0.0003i
Sextupole (m=3)	-0.0688 - 0.0001i	-0.0640 - 0.0000i

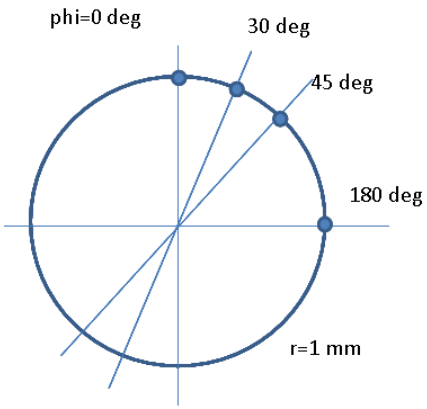

Centre: Ez ~m
0 deg: Ez ~m+d+q+s
30 deg: Ez ~m+d.cos(30)+q.cos(60)
45 deg: Ez ~m+d.cos(45)+s.cos(135)
180 deg: Ez ~m+q.cos(180)

The monopole component causes beamloading in end cells, resulting
1) bunch energy spread in steady state regime $t > t_{fill}$
2) kick variation along train in transient regime $t \leq t_{fill}$

Beamloading compensation

- Steady state beamloading ($t > t_{fill}$) is important in single bunch applications

- This can be eliminated by modifying the coupler cell topology such that the beam sees a 180^0 variation of the monopole component which then cancels between the end cells

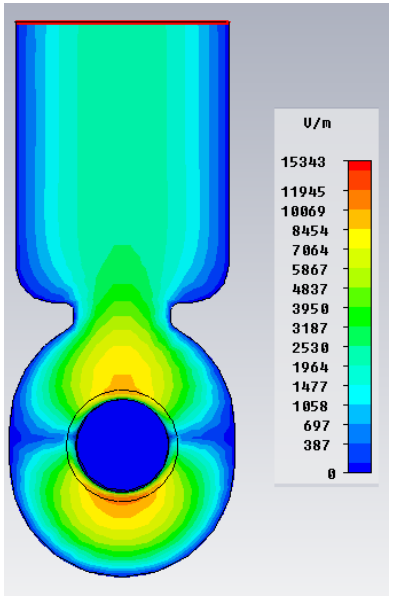

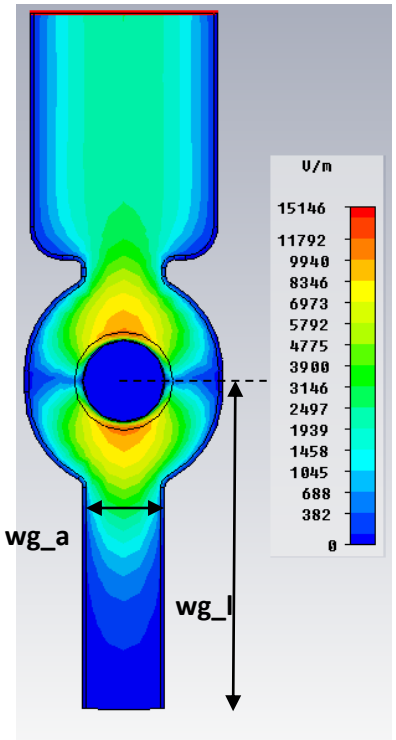

Complex on-axis field

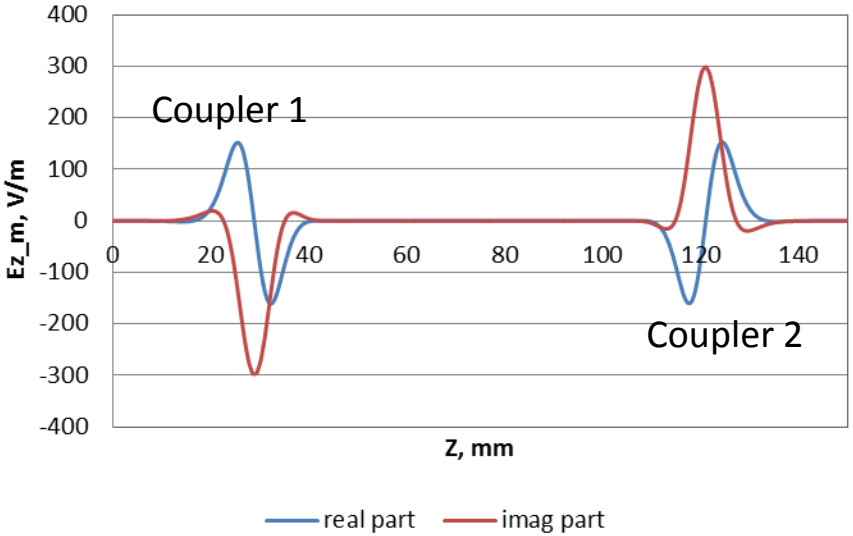

V_m=0.003–0.001i V

Beamloading elimination

- When a bunch passes the upstream cell, it modifies the field through beamloading. This perturbation propagates downstream which affects the kick on following bunches for one fill time which is 11.42 ns or 23 bunches
- This can be eliminated only if the monopole field in the end cell is eliminated
- **A straightforward way is to use dual-feed coupler if no alternative is there**
- **An alternative is to use a one full wave long end cell to cancel the complex voltage across each end cell separately (idea by A. Grudiev)**

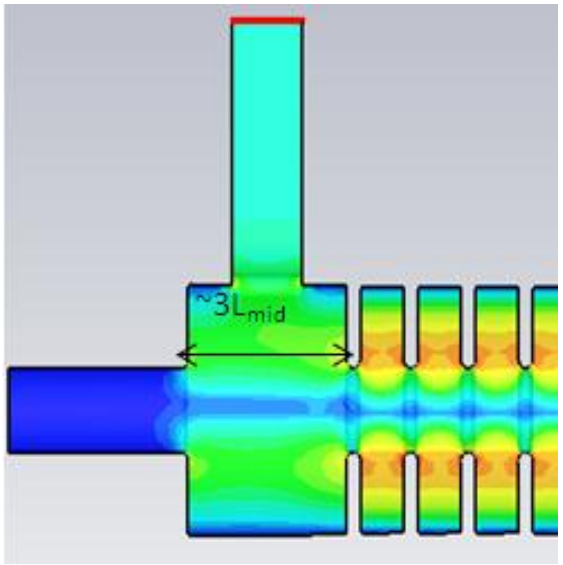

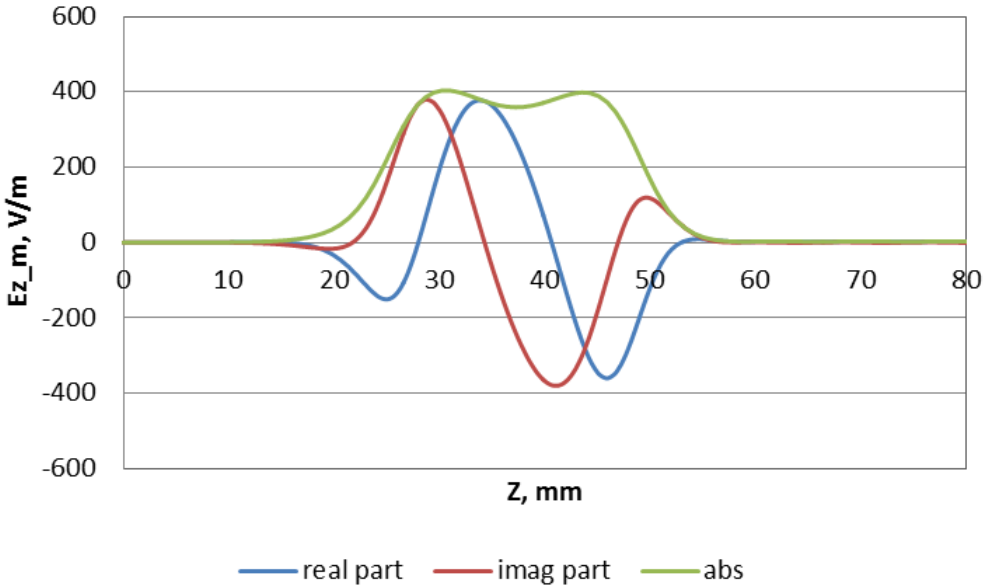

The non-flat amplitude in the extra long cell prevents full cancellation, V_m=0.008–0.023i V

- **A second way is to use TE_{20} mode in the waveguide to couple to TM_{110} (idea by A. Grudiev)**

- **This causes the power flow in the horizontal plane than vertical thereby not inducing a monopole field**

TE_{10} power flow

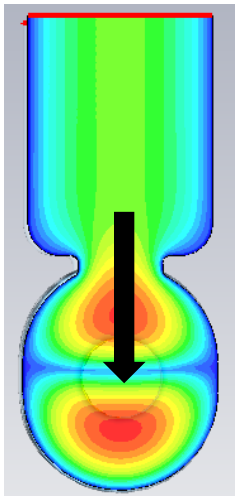

TE_{20} power flow

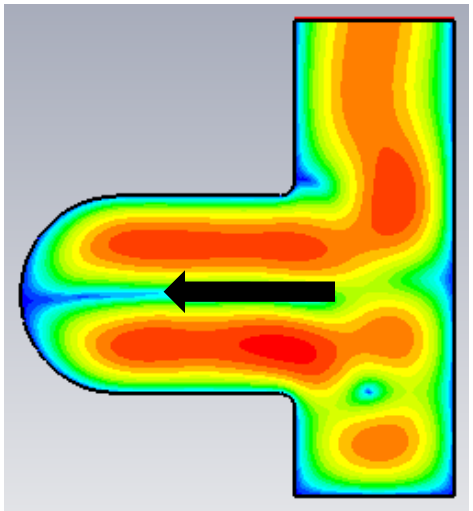

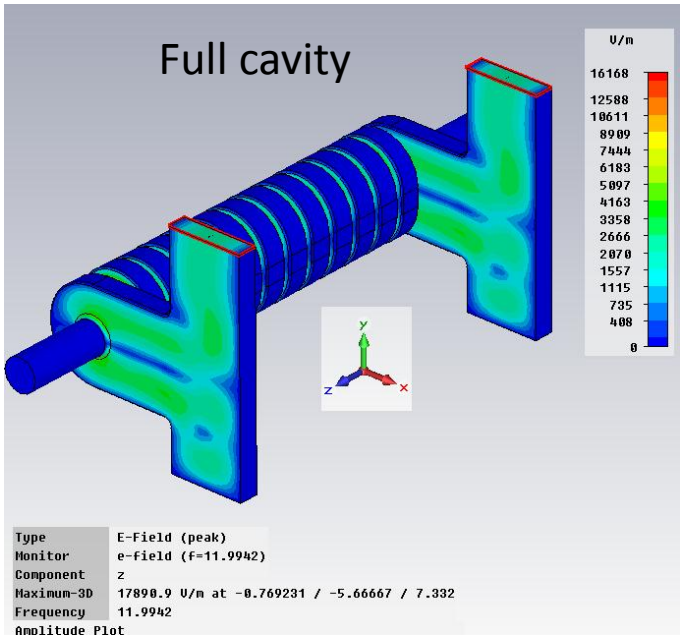

- This needs TE_{10} to TE_{20} mode converter

- TE_{10} –TE_{10} coupling should be minimised in order not to induce monopole field in the cavity

- V_m=–5.6485e-004–3.3159e-005i

Prototype 1-SLAC test

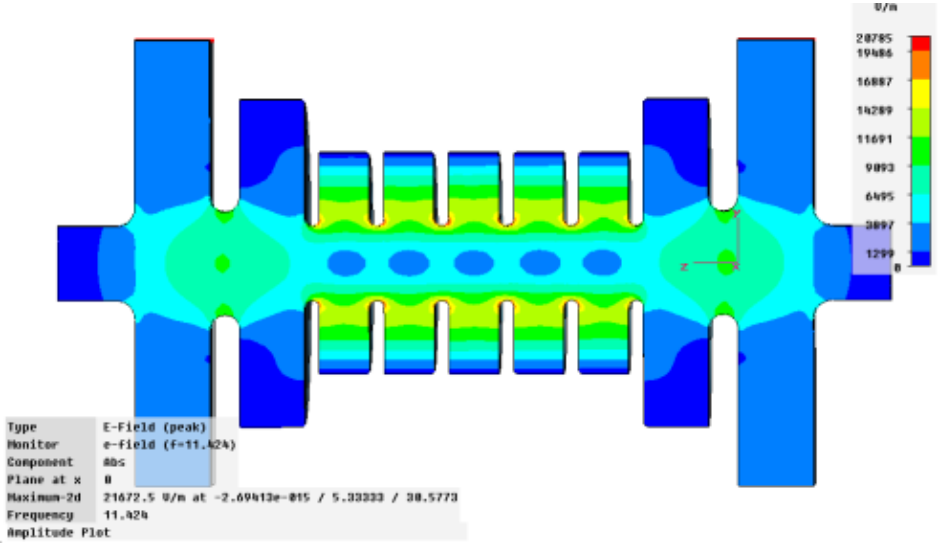

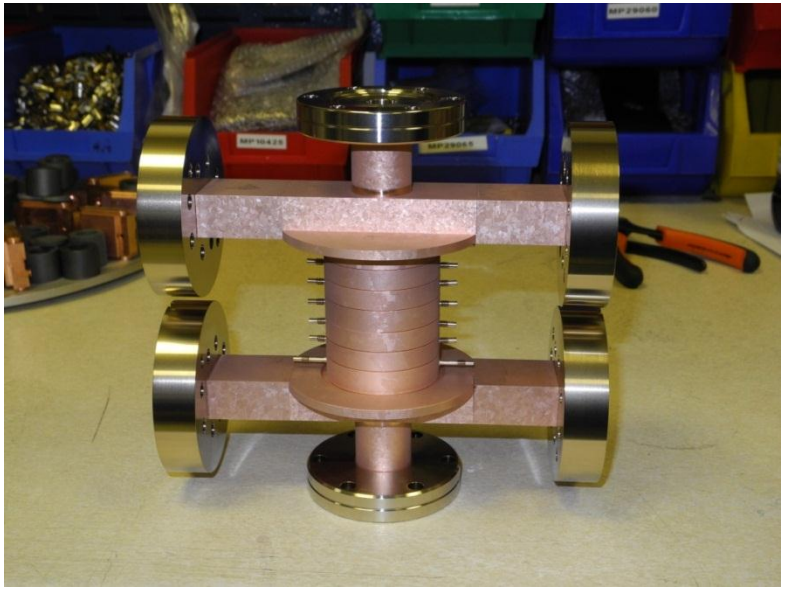

Number of cells	5 regular TM, 2 matching TE
Mode (rad, GHz)	$2\pi/3$, 11.424
Peak power (MW)	20
E_{surf} (MV/m)	90
Gradient, MV/m	37
H_{surf} (kA/m)	350
ΔT (K)	24 (200 ns pulse)

- The cavity was made at UK and been delivered
- Some preliminary low power RF tests were done
- Found sharp peaks in S21 which is reflections from the non-compatible waveguide mating we used
- New mating flanges are under machining

Prototype 2-CERN test

- Single feed prototype for cold test
- Drawings done at CERN and manufacturing of disks almost finished at VDL, The Netherlands

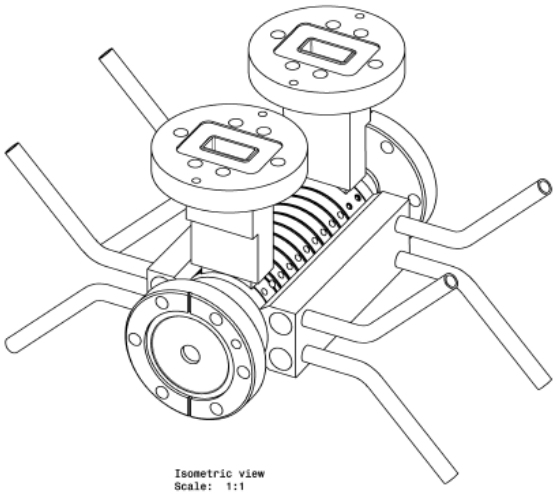

Mode (rad, GHz)	$2\pi/3$, 11.9942
Q_{Cu}	6247
Group vel, %c	−2.90
Kick (MV)	2.56
Gradient, MV/m	26
Peak power (MW)	13.35
E_{surf} (MV/m)	103
H_{surf} (kA/m)	348
ΔT (K)	26 (200 ns)
S_c (W/mm^2)	3.32

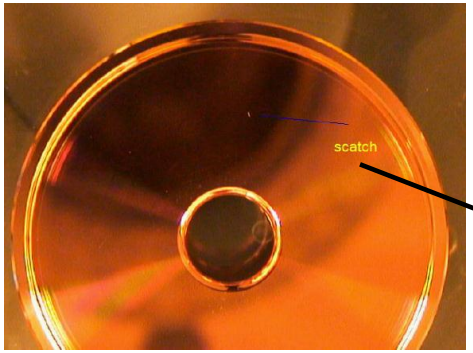

- For most parts, surface roughness is better than 24 nm
- For some parts it is worse than 1000 nm, needs re-machining

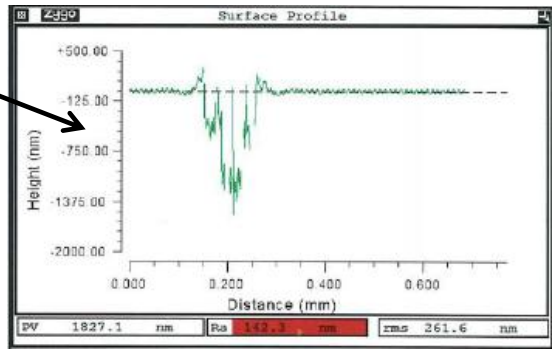

Prototype 3- under design

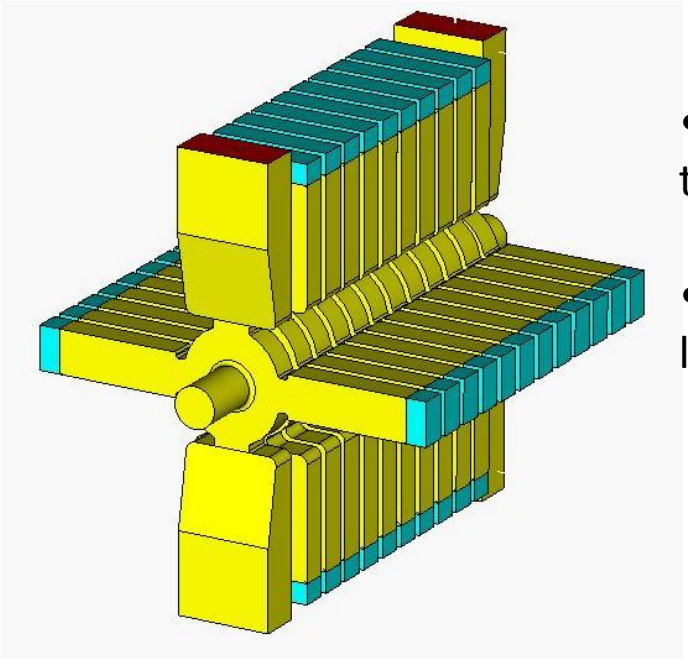

- Waveguide dampers needed to meet the wakefield tolerances in both planes

- Beamloading eliminated single feed structure design is more likely to be built unlike the one shown in Fig

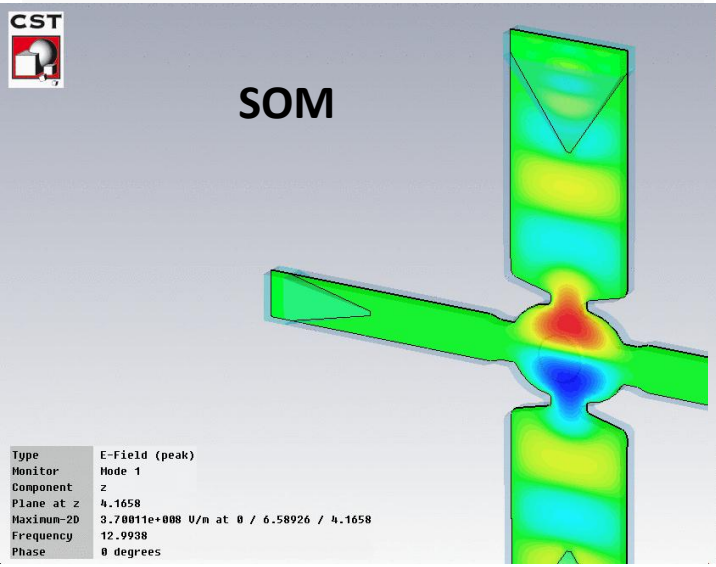

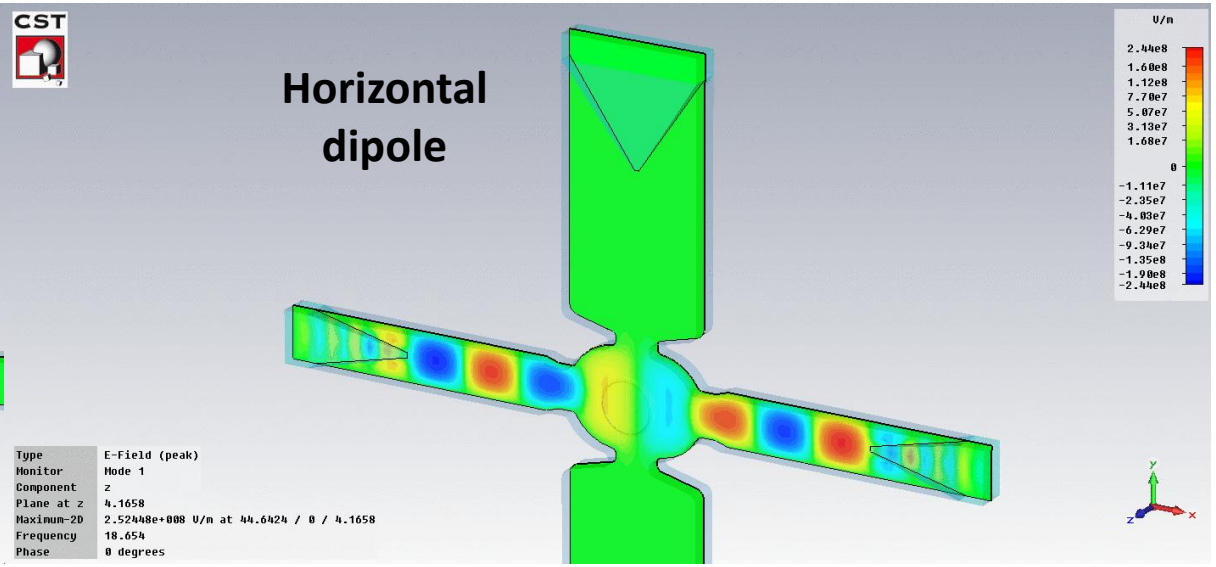

Undamped vs damped cell

Undamped cell

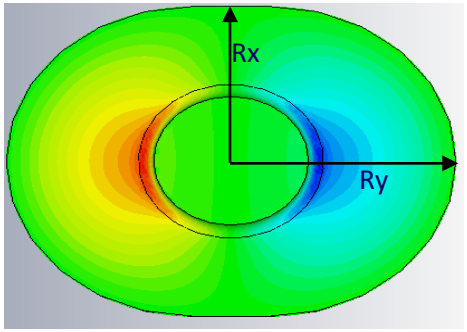

Waveguide damped

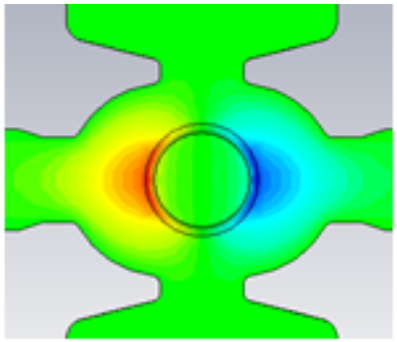

Ry/Rx=1.207, f_{crab}=12 GHz, f_{som}=13 GHz

Shape	Q	R_t/Q, Ohm	$-v_{gr}$, % c	E_m/E_t	H_m/E_t
Cylindrical-undamped	6396	53.66	2.94	3.497	0.0115
Racetrack-undamped	6395	54.65	2.93	3.425	0.0114
Racetrack-Damped	6022	50.57	2.63	3.676	0.0117

No major changes in RF properties with cell shape or damping

LLRF for phase control

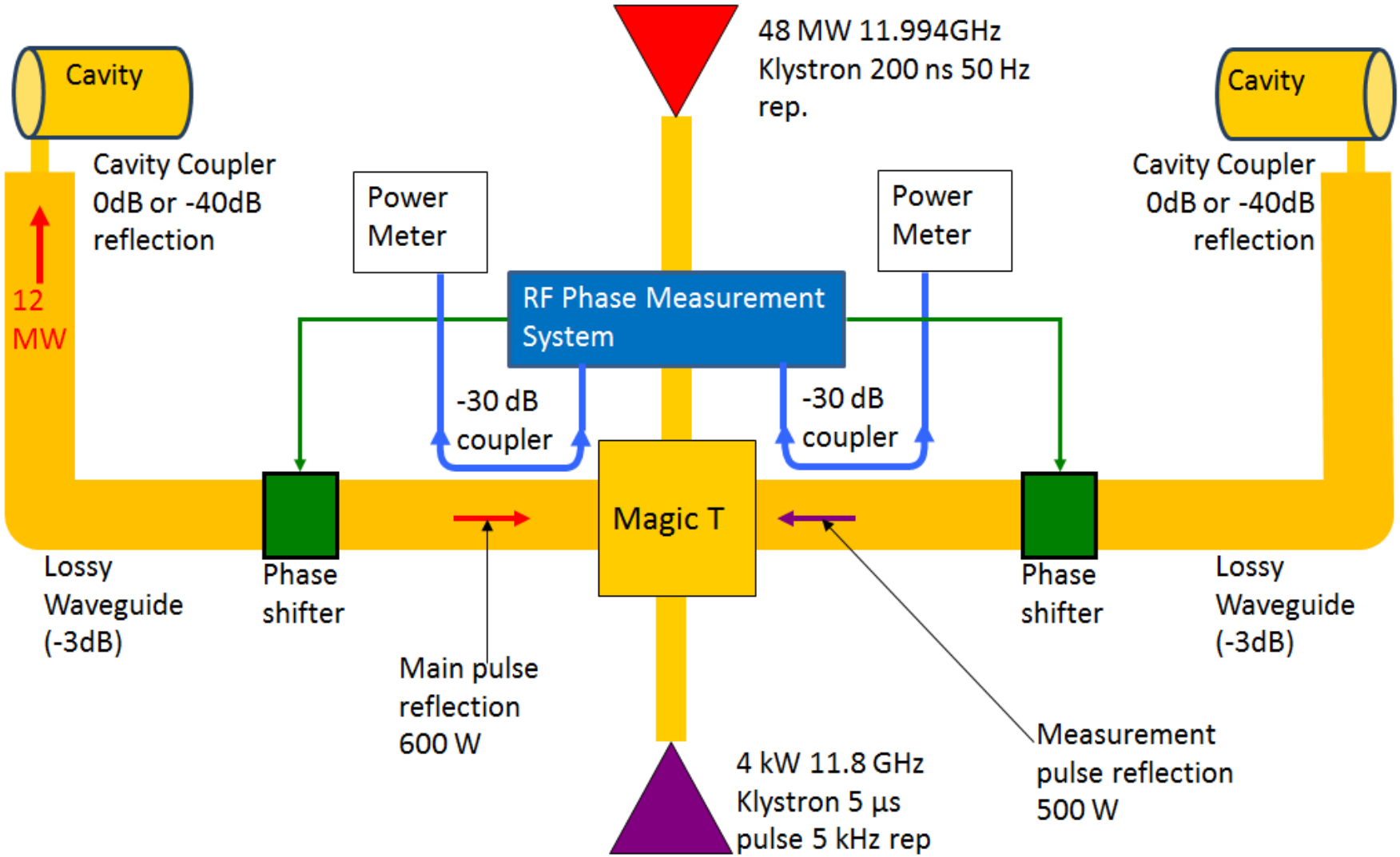

The Blue box

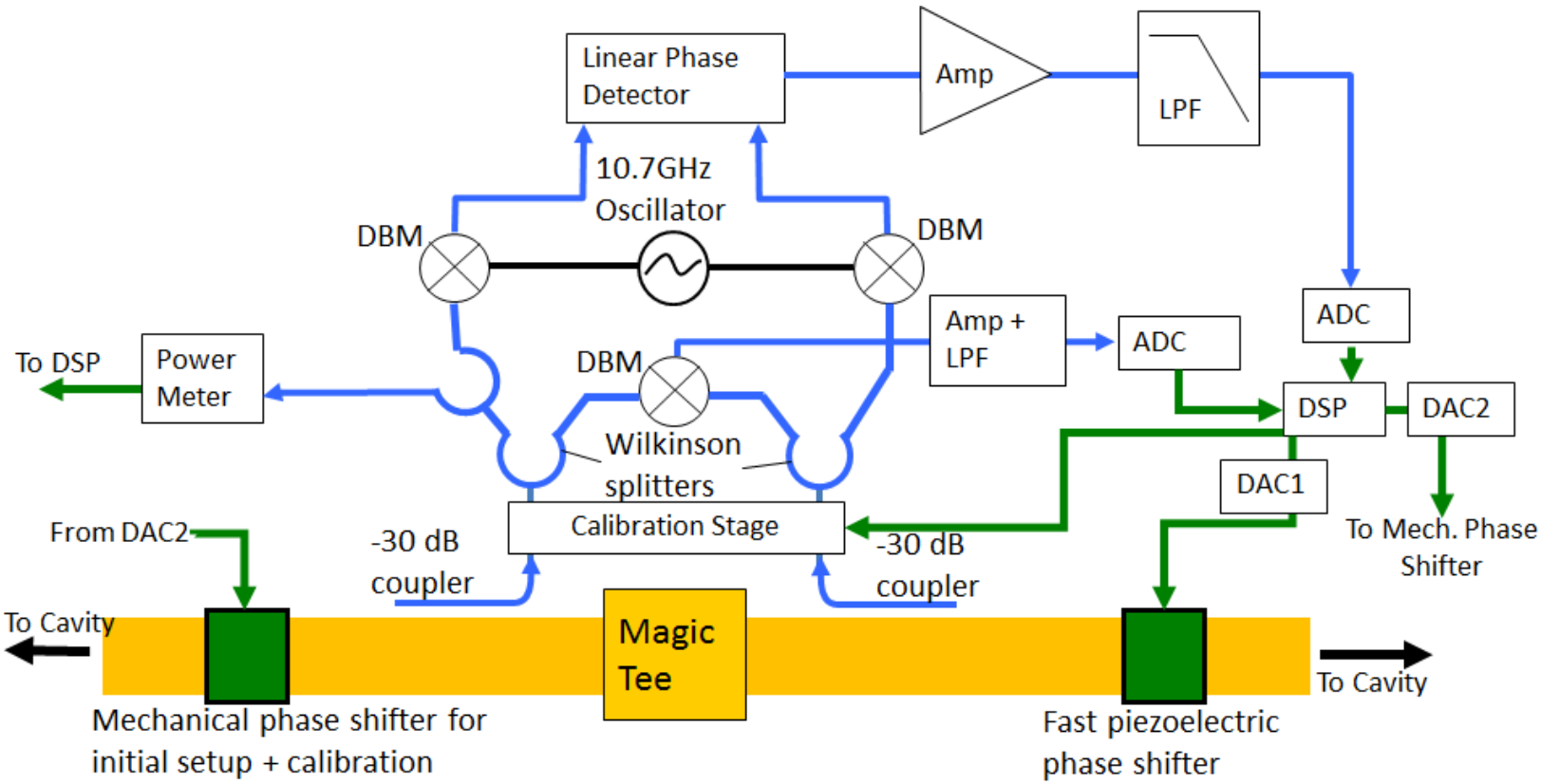

- Fast phase measurement at 20-30 ns using the a double balanced mixer
- Calibration of the mixer is done during the pulse using a linear phase detector, which works at 1.3 GHz±500 kHz.
- The DBM then does the differential phase measurement (5 µs, 5 kHz) during the OFF time of the pulse
- The DSP uses this to generate control signal for the phase shifter

Test setup results

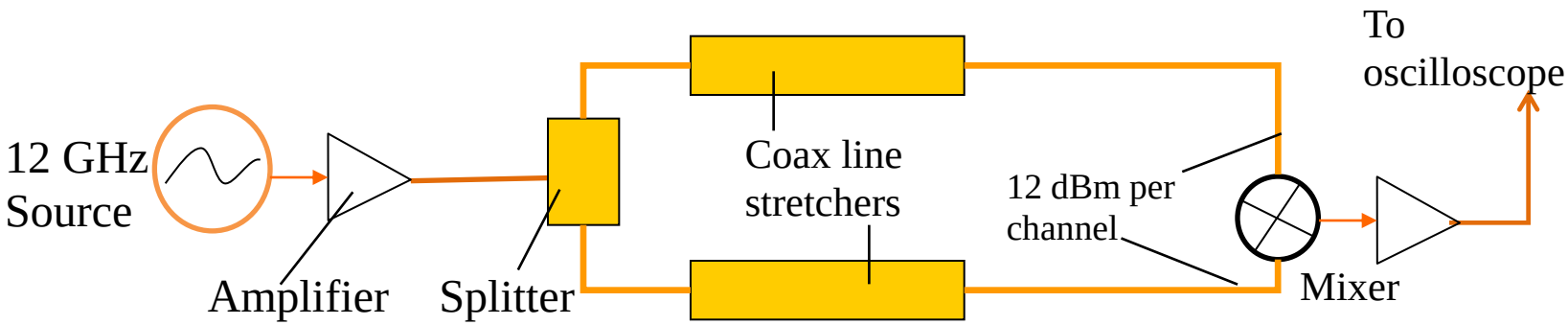

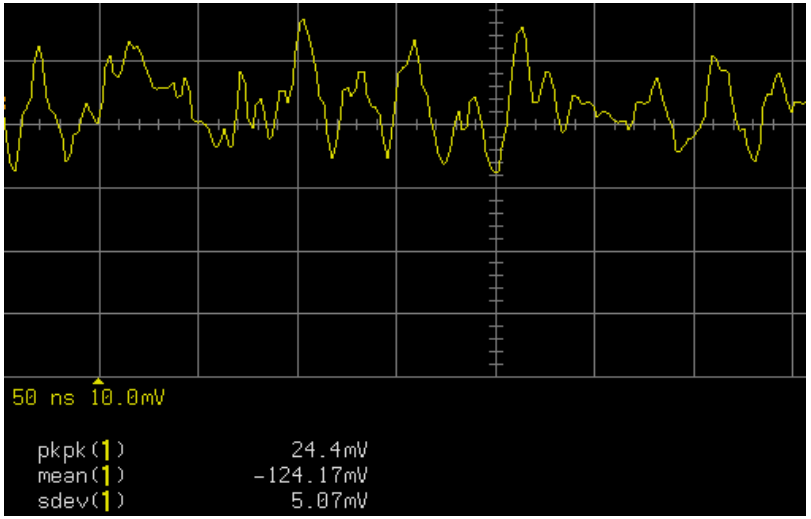

RMS: 1.8 mdeg
Pk-Pk: 8.5 mdeg
Spec: 18 mdeg

- All results taken with 30 MHz LPF
- Efforts going on to improve long term stability using multiple DBMS design

Conclusions

Lancaster University / Cockcroft Institute, UK has been involved in various deflecting cavity projects which are,

- ILC – designed and vertical tested two single cell cavities in Daresbury laboratory, with cavity to cavity phase control
- LHC upgrade – compact 4 road cavity
- EBTF – cavity for the new Electron beam test facility in Daresbury laboratory
- PBG crab cavity – collaboration with Huddersfield uni

- CLIC – 3 prototypes being done
  ~ prototype 1 for RF test designed and built in uk
  ~ prototype 2 for RF test designed and being finished at VDL (through CERN).
  ~ prototype 3 for beam test is under design
  ~ Phase control board is under development

Table 1
CLIC beam parameters used for calculations [9].

Parameter	Value
Nominal beam energy, E_b	1.5 TeV
Charge per bunch, q_b	0.595 nC
Bunches per train, N_b	312
Interbunch spacing, T_b	0.50024 ns (6 RF periods at 11.9942 GHz)
Crossing angle, θ_c	20 mrad
Horizontal beta function at IP, β_x^*	6.9 mm
Vertical beta function at IP, β_y^*	0.068 mm
Horizontal bunch size at IP, σ_x^*	45 nm
Vertical bunch size at IP, σ_y^*	1 nm
Horizontal beta function at crab cavity, β_x^{cc}	79.4 km
Vertical beta function at β_y^{cc}	84.7 km
Horizontal bunch size at crab cavity, σ_x^{cc}	153 μm
Vertical bunch size at crab cavity, σ_y^{cc}	35.3 μm

Cavity tuning

- Four pins attached at 45 deg to the racetrack cell has the most tuning sensitivity

Beadpull simulation with metallic disk, 1.5 mm dia, 0.5 mm thickness

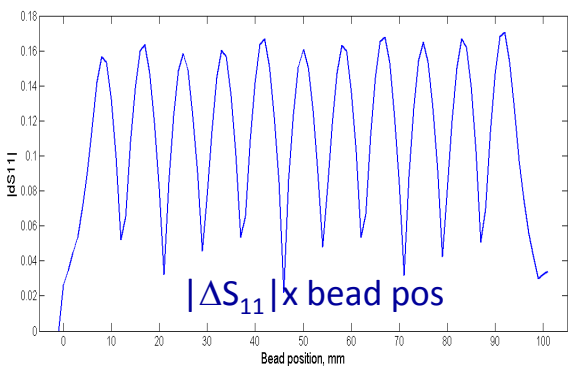

Complex ΔS_{11}

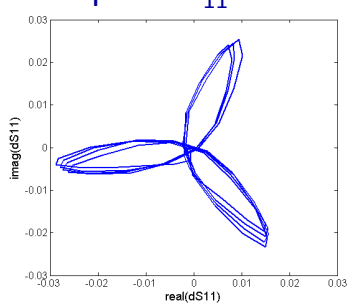

$\Delta S_{11}=S_{11}^{p}-S_{11}^{u}=-j\omega kF^2/2P_{in}$

P_{in}=input power

$S_{11}^{p/u}$=perturbed/unperturbed complex reflection coefficient at input coupler

F=Field quantity perturbed by the bead

Endcell

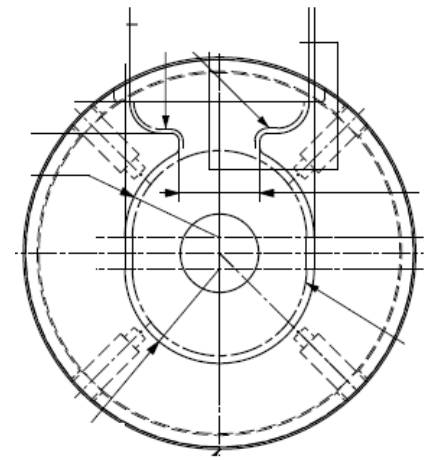

Regular cell

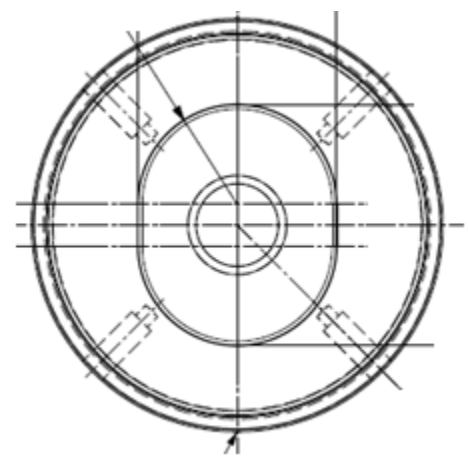

- T.Khabiboulline, A new tuning method for travelling wave structures, PAC95
- J. Shi et.al, Tuning of CLIC accelerating structure prototypes at CERN, LINAC10