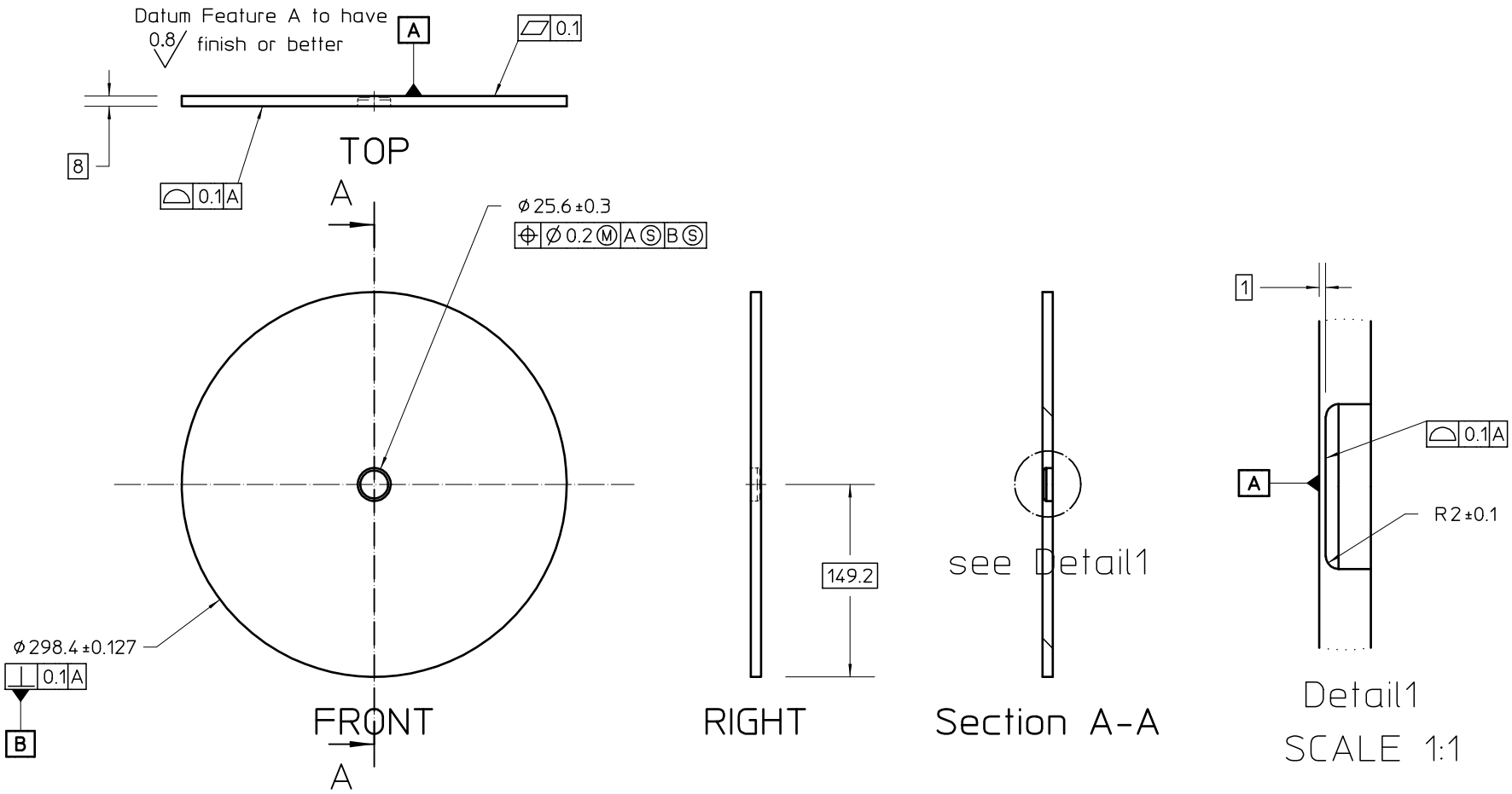

REQD	ITEM	PART NO.	DESCRIPTION

REV	AUTHOR	APPROVER	DATE	CHANGES
A	A. Lambert	???	08-13-12	INITIAL

UNLESS OTHERWISE SPECIFIED
REF: ASME Y14.5M-1994, THREADS ARE CLASS 2
BREAK EDGES .016 MAX. ON MACHINED WORK
REMOVE BURRS, WELD SPLATTER & LOOSE SCALE

TOLERANCES: .X ± .- .XX ± .01 .XXX ± .005
FRACTIONS: ± 1/5
ANGLES: ± 0.1°
MACH. SURFS.: 3.2 ✓ OR BETTER

PROJECT NAME: GENERAL
PROJECT NUMBER: NONE

DO NOT SCALE PRINT
SCALE: 1 : 5
CATEGORY CODE: XX0000

THIRD ANGLE PROJECTION

ERNEST ORLANDO LAWRENCE
BERKELEY NATIONAL LABORATORY
UNIVERSITY OF CALIFORNIA

BERYLLIUM PLATE
BERYLLIUM CAVITY

SHEET 1 OF 1 | SIZE: A | DWG NO: NAU011 | REV A