LLRF Status and Future Projects at Fermilab

Brian Chase

Fermi National Accelerator Laboratory

Fermilab

Overview

- System responsibilities
- NOvA era Recycler and Main Injector RF
- ASTA
  - RF systems
  - Phase Reference line
  - Klystron linearization
- Project X and PXIE
- R&D
  - SoC LLRF Platform
  - High Efficiency Solid State PA (SBIR)
  - Magnetron PA

LLRF Team and System Responsibilities

AD/RF/LLRF
Brian Chase
Ed Cullerton
Philip Varghese
Barry Barnes
Dan Klepec
Dave Vander Meulen

CD/ES
Gustavo Cancelo
Ted Zmuda
Ken Triptow

- 400 MeV LINAC (201.25, 805 MHz)
- Main Injector, Mid Level RF, Comb Filter Beam Loading Compensation (53 MHz)
- Recycler Ring (53 MHz)
  - commissioning now
- A0 Photo-injector (1.3, 3.9 GHz)
- ASTA Beam Test Facility (1.3 GHz)
- Horizontal test stands (325,650,1300 MHz)

NOvA/ANU Beam Transfer Scheme

for Slip Stacking in the Recycler Ring

12 Booster batches are slip stacked in the Recycler and then transferred to the Main Injector. This allows a higher MI rep rate and higher average beam power (700kW) for Neutrino production

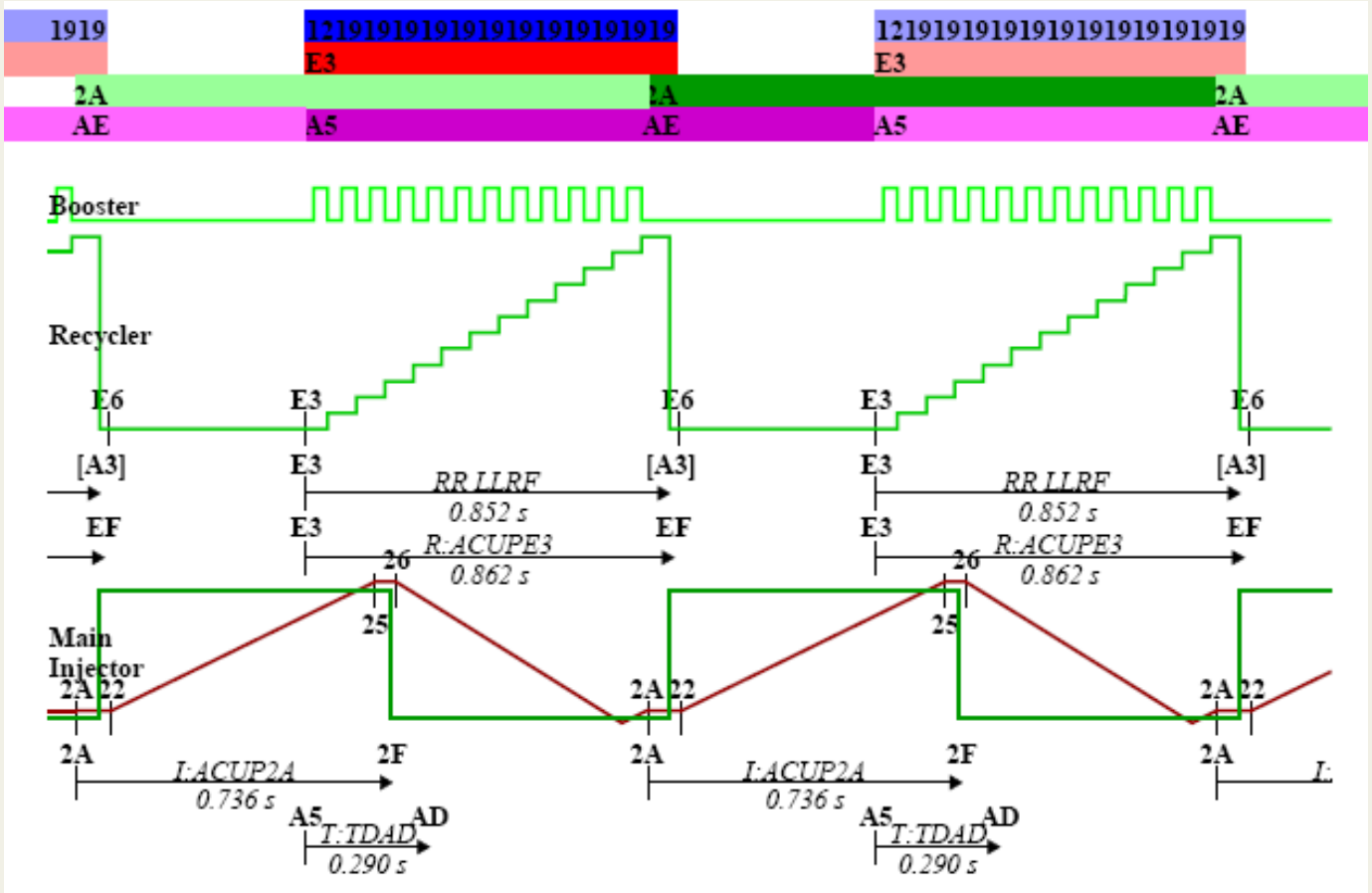

MI Prepares for RR To MI Beam Transfer

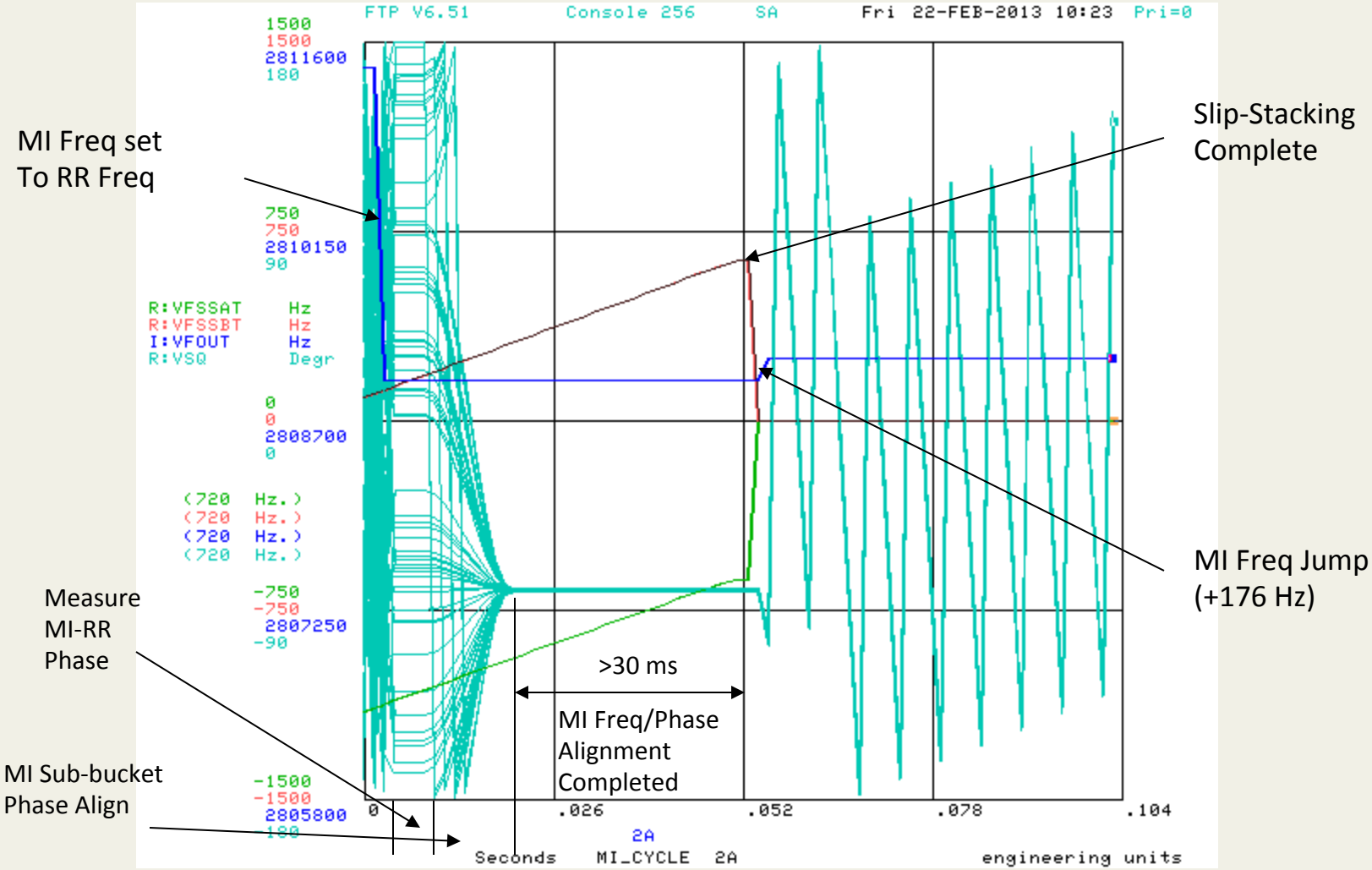

Advanced Superconducting Test Accelerator(ASTA)
A developing users facility

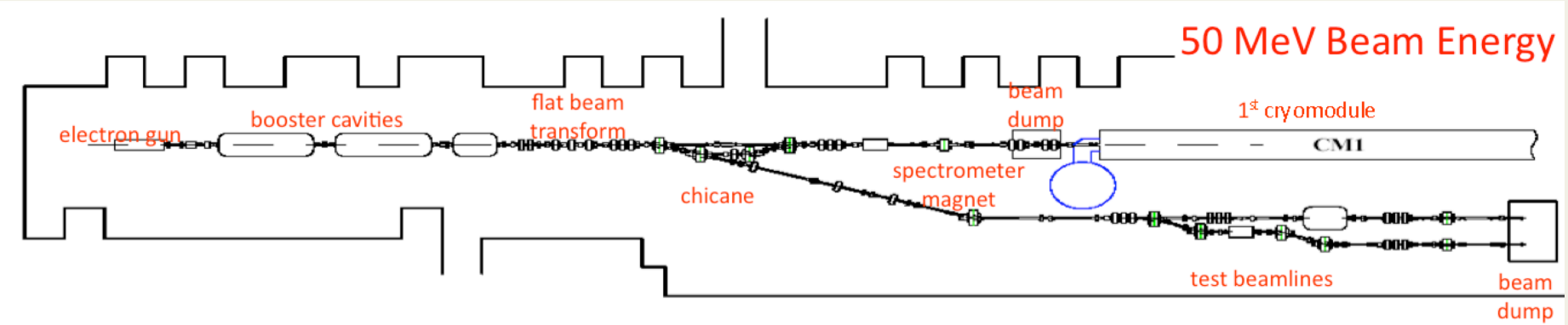

ASTA LLRF System

- Commissioning of gun and Photo Cathode is in progress
- Cooldown efforts of CC2 and CM1 are underway

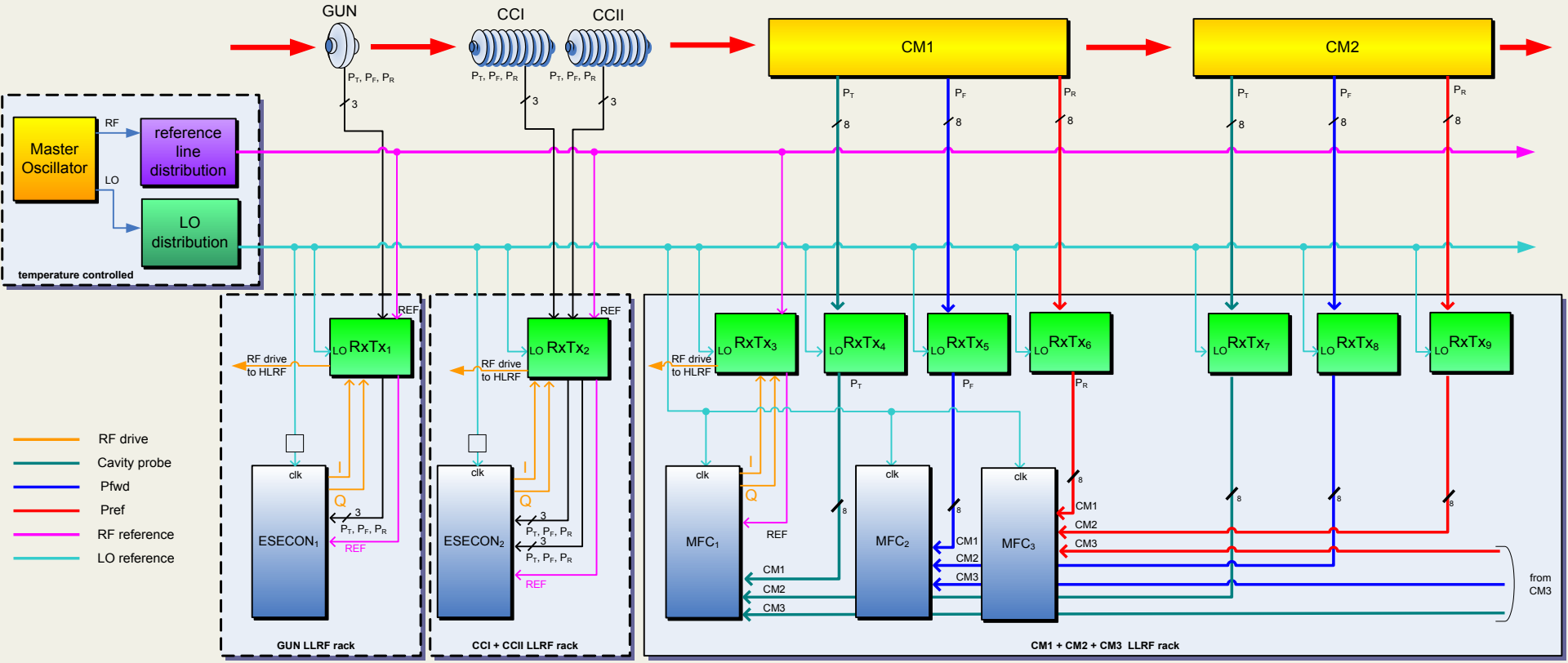

Fermilab

ASTA Gun Controller Performance

1 msec pulse length
14 MV/m, 400 kW – limited by ongoing cavity conditioning

Open loop

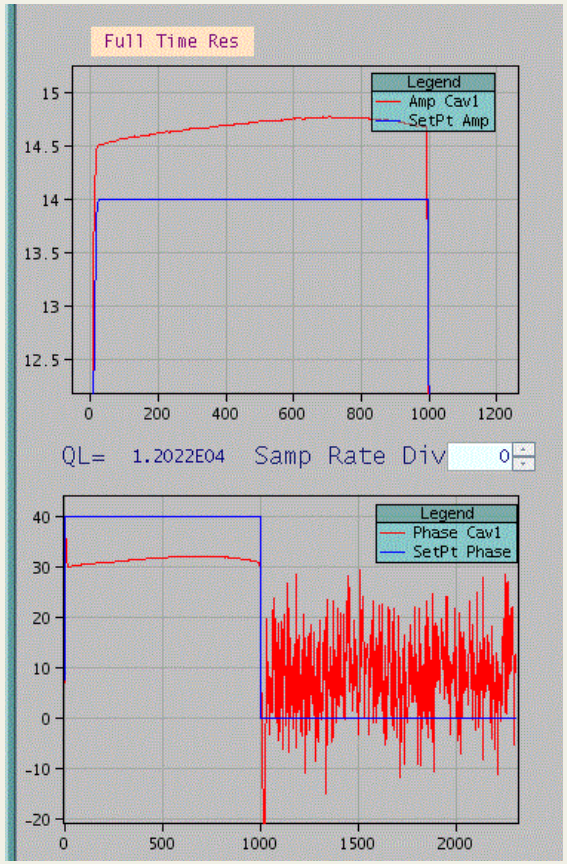

Closed loop

Pg ~ 1, Ig 250,000

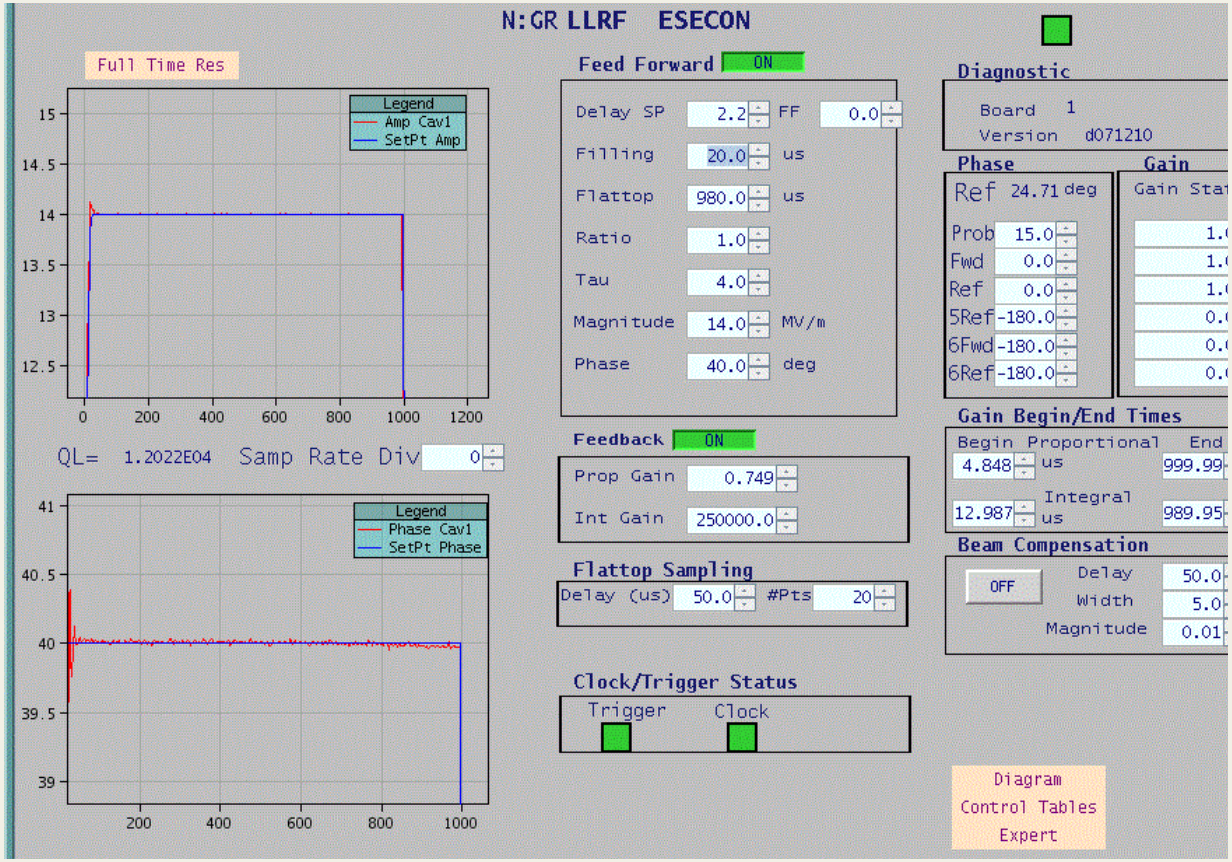

ASTA CM1 LLRF Racks

Receivers and Up-converter

VXI CPU & 3 MFCs
- Probe, Fwd, Ref

Master Oscillator

Power Supplies

1.3 GHz Phase Averaging Reference Line ASTA

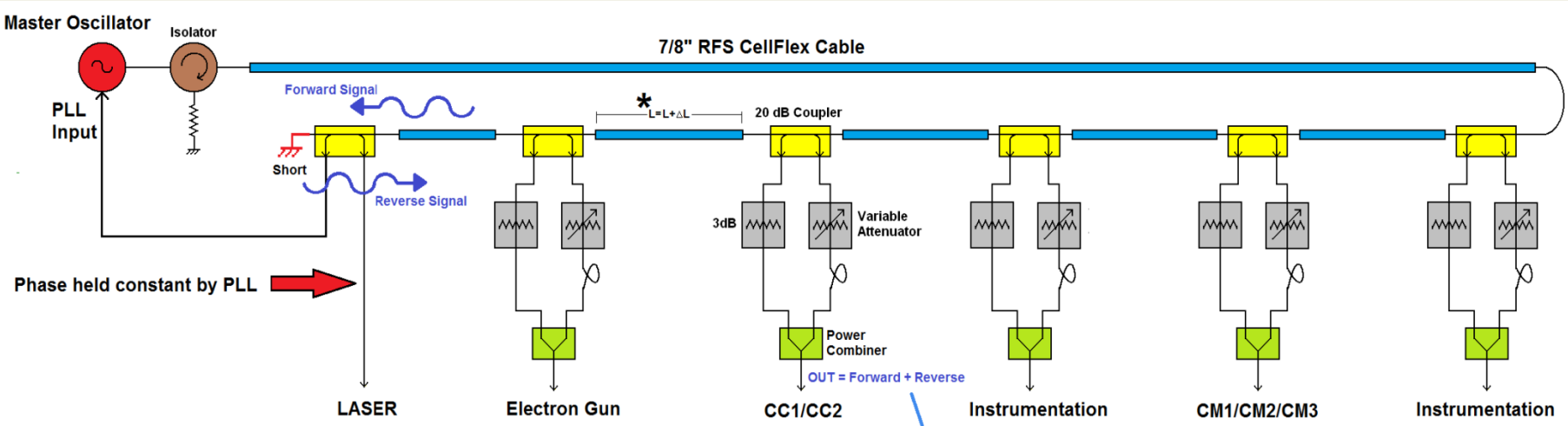

* changes in cables lengths between tap positions due to temperature changes ($L = L + \Delta L$)

the output becomes: $\text{OUT} = \underbrace{A_F \cos(wt + \phi_F + \Delta\phi_F)}_{\text{Forward}} + \underbrace{A_R \cos(wt + \phi_R - \Delta\phi_R)}_{\text{Reverse}}$

When the phase at the shorted end of the reference line is held constant, $\Delta\phi_F = -\Delta\phi_R$

When $\Delta\phi_F = -\Delta\phi_R$,

$$\arg\{A_F \cos(wt + \phi_F + \Delta\phi_F) + A_R \cos(wt + \phi_R - \Delta\phi_R)\} = \arg\{A_F \cos(wt + \phi_F) + A_R \cos(wt + \phi_R)\}$$

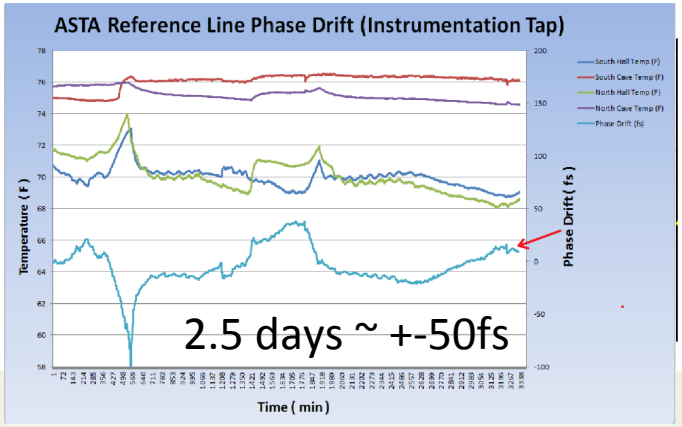

Klystron Linearization of CM1

- Allows constant gain slope for feedforward and feedback
- Allows operation close to saturation and prevents overdrive of klystron

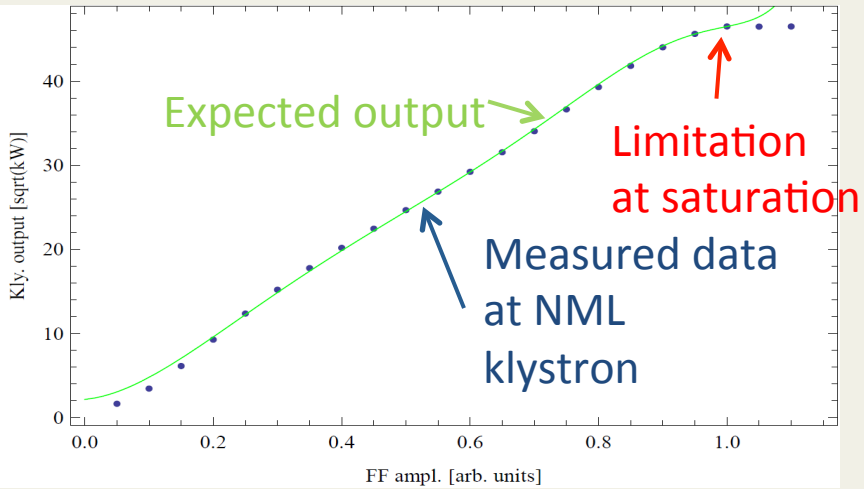

See Mathieu Omet's talk

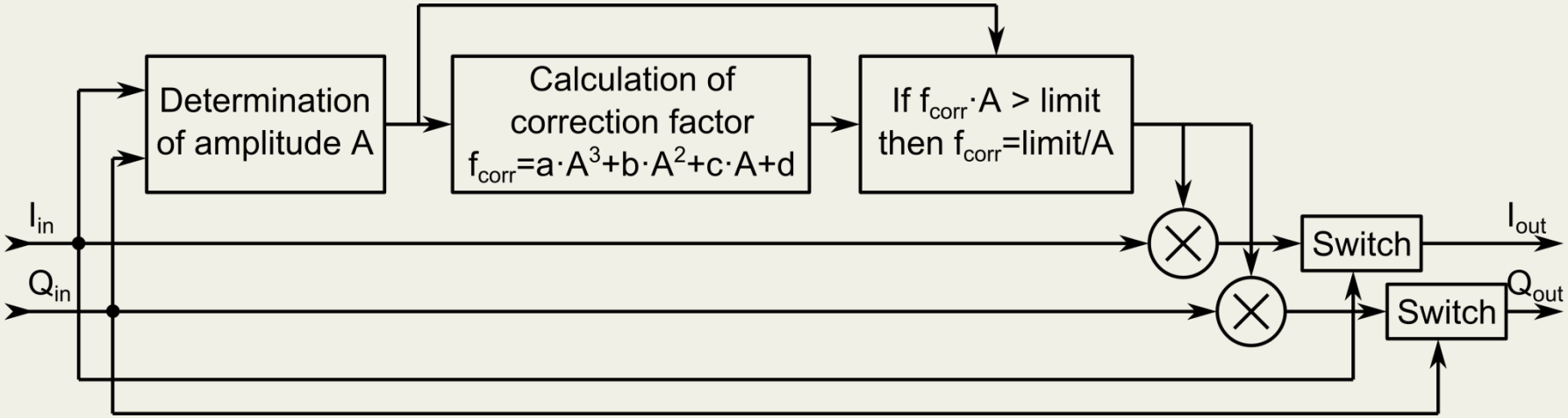

Project X Reference design configuration

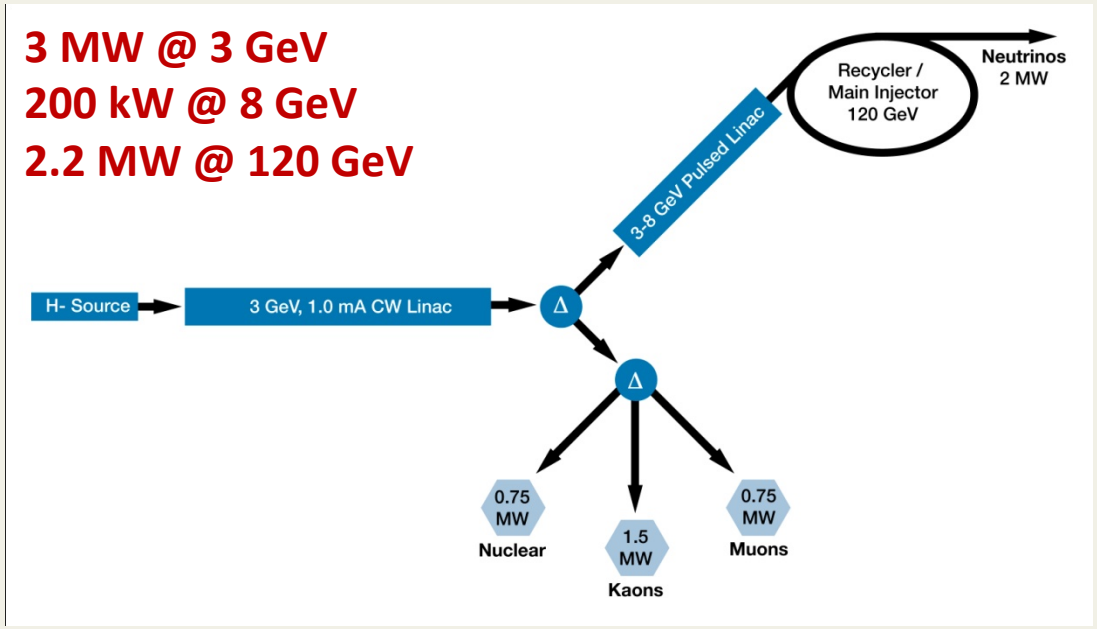

Design is undergoing reevaluation

- 3-GeV, 1-mA CW linac provides beam for rare processes program
  - ~3 MW; flexible provision for beam formats supporting multiple users
  - <5% of beam is sent to the MI
- 3-8 GeV acceleration: pulsed linac
  - Linac would be 1300 MHz with <5% duty cycle
  - Up to 200 kW beam power available at 8 GeV

Beam Pattern Through 3 GeV Linac

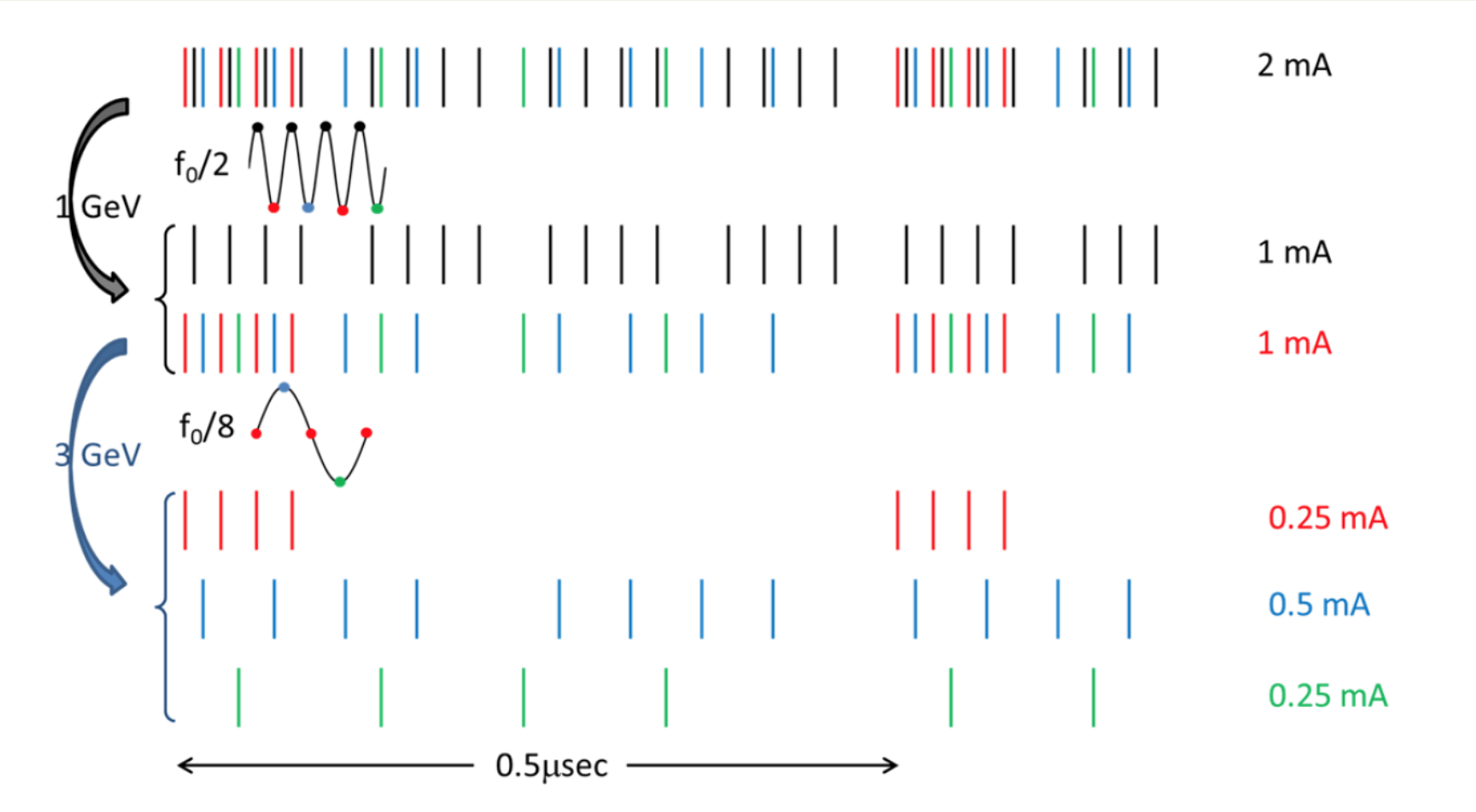

PXIE RF and LLRF Layout

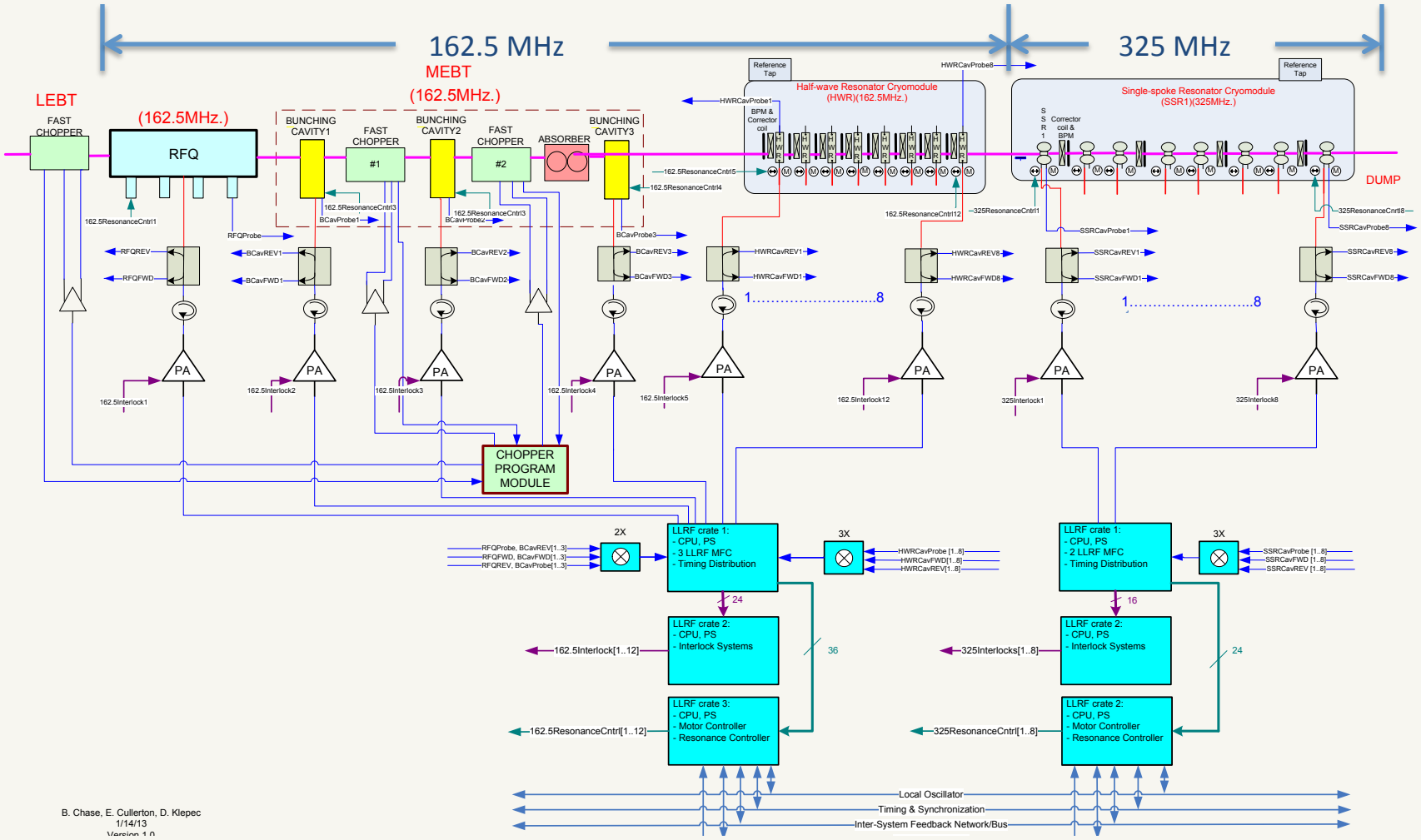

High Efficiency Solid State PA Development

SBIR with Green Mountain Radio Research

Present focus is on GaN

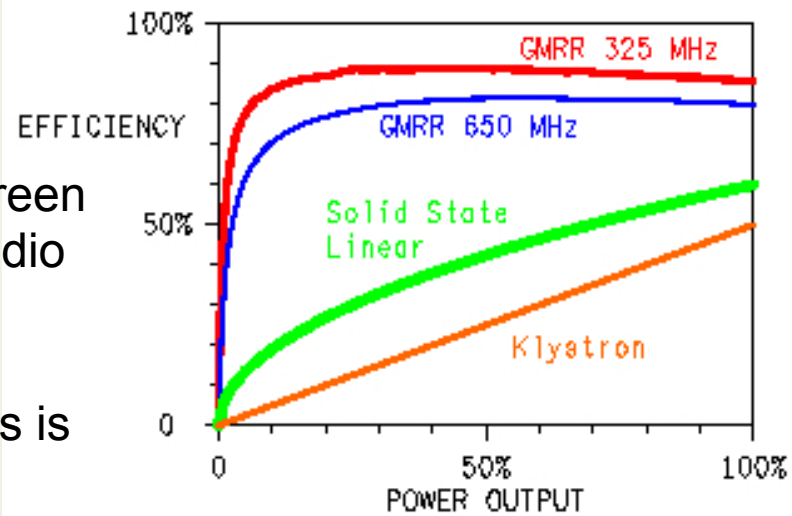

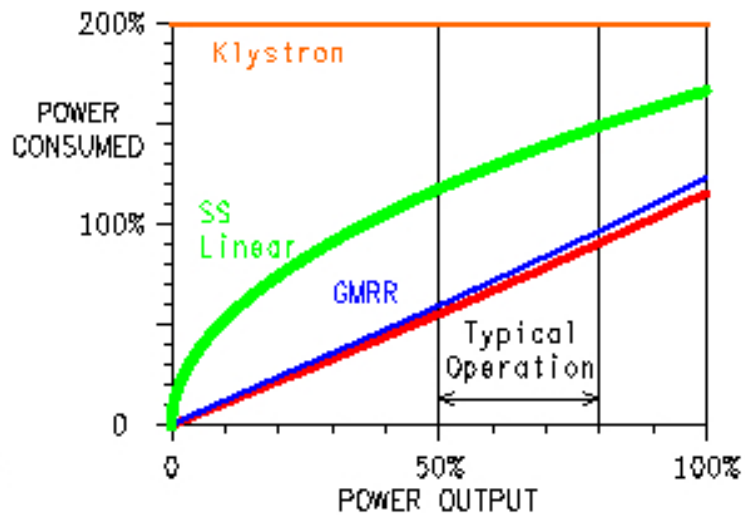

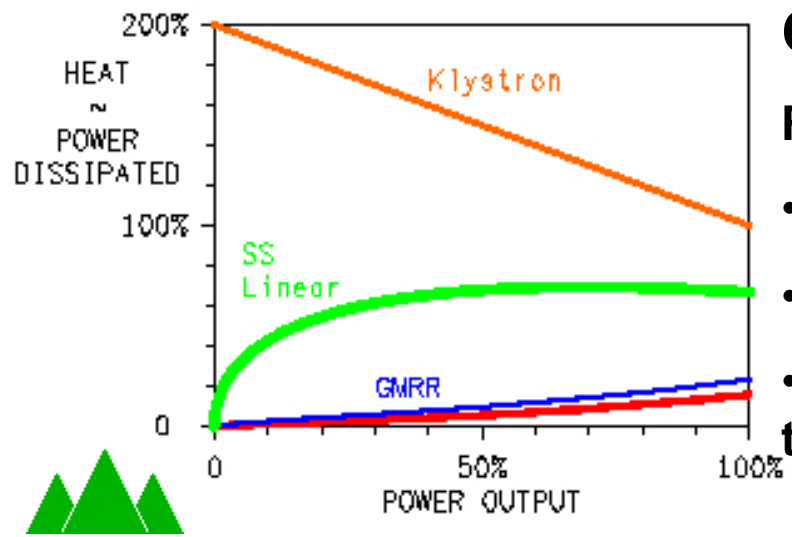

Compared to klystrons

Reduction in:

- **Energy use ~2X**
- **Cooling requirements ~ 5 X**
- **Downtime (redundancy in transistors)**

GMRR VG12-1

High-Efficiency PA

Requires tight coupling between LLRF and HLRF

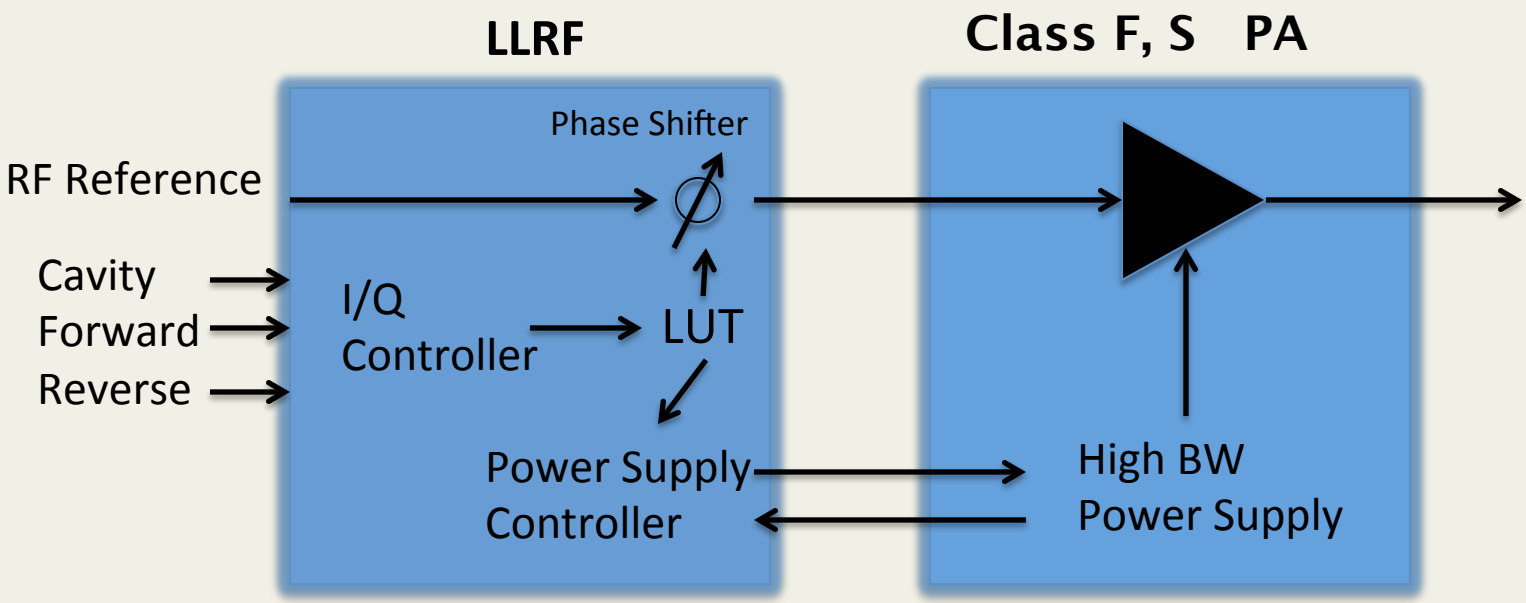

LLRF:

- controls power supply voltage
- corrects for power supply induced phase push
- optimizes for efficiency

Injection Locked Magnetron Vector Sum PA
1 kW CW Test @ 2.45 GHz

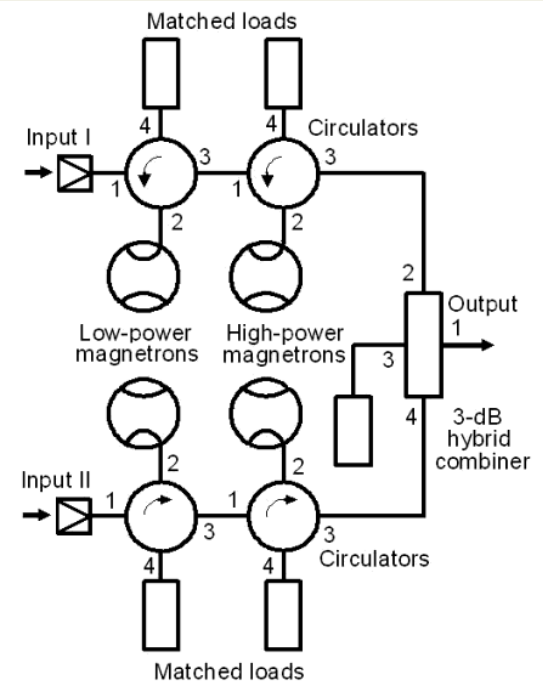

- Magnetron BW is limited by the radial velocity of the electrons (P.S. Voltage and magnetic field)

- Group delay ~ 55 ns
- Spectrum is clean except for power supply induced modulation

- LLRF System is being built

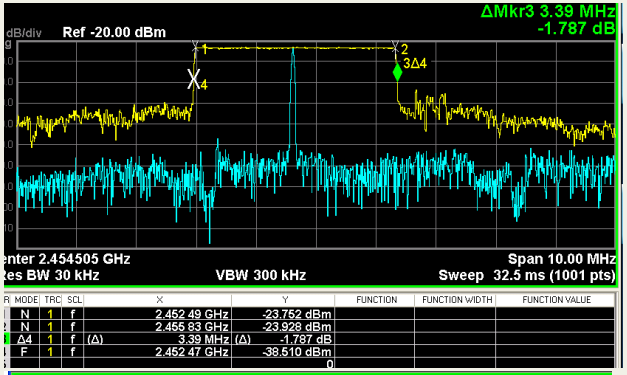

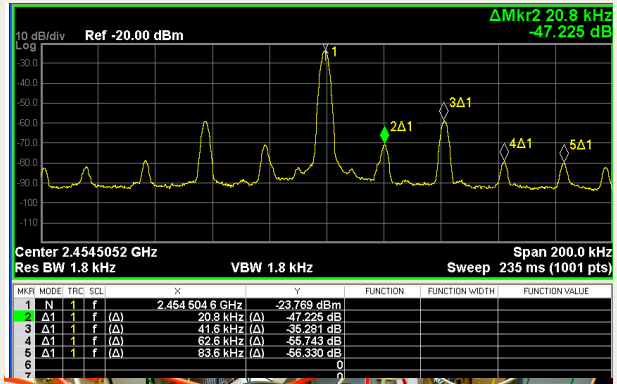

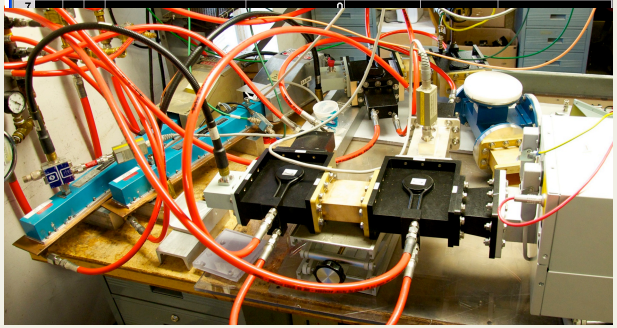

Grigory Kazakevich, Muons Inc.
Ralph Pasquinelli, Brian Chase, FNAL

Project X LLRF Concept - 8 Cavity Controller

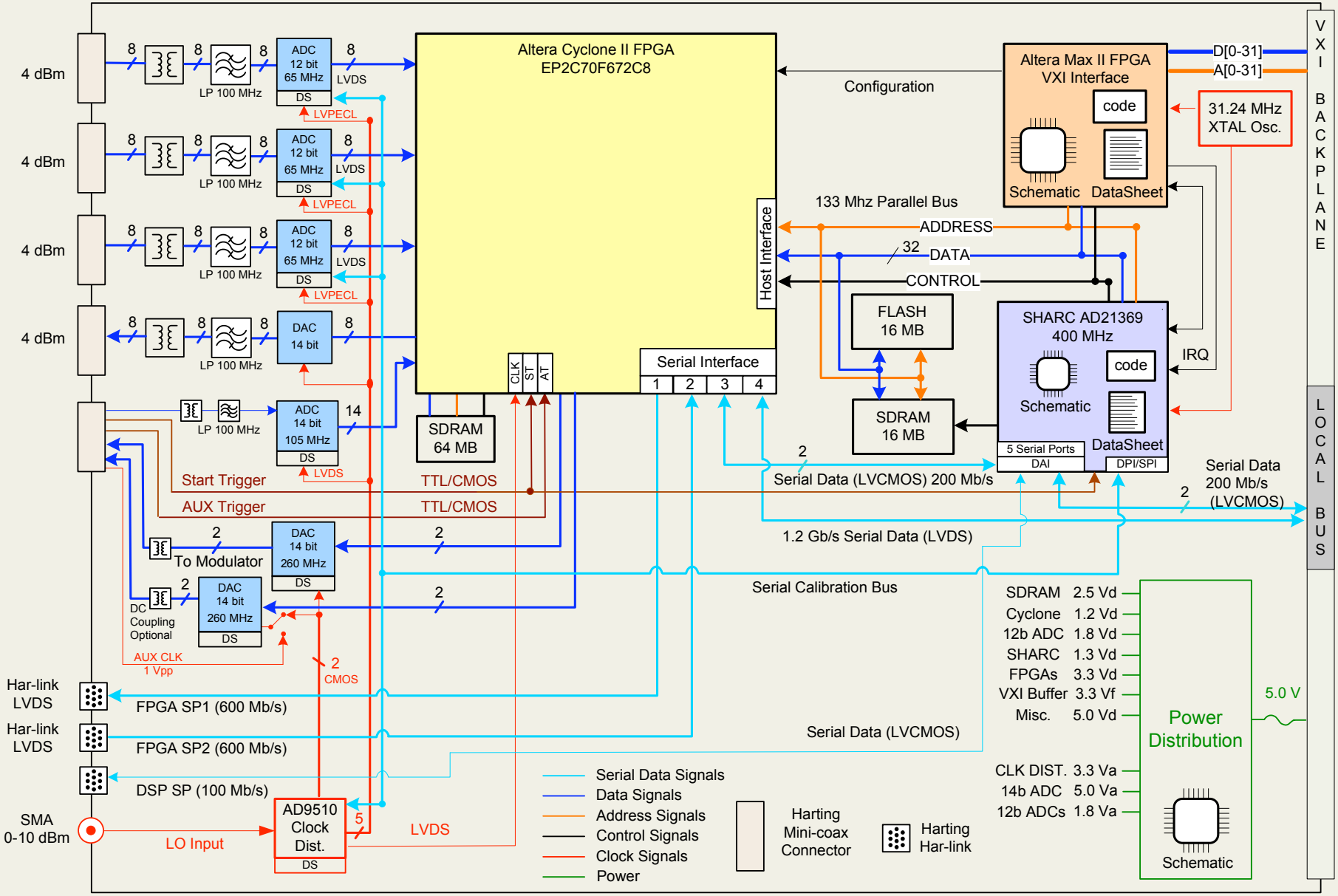

Project X LLRF SOC Concept - 8 Cavity Controller

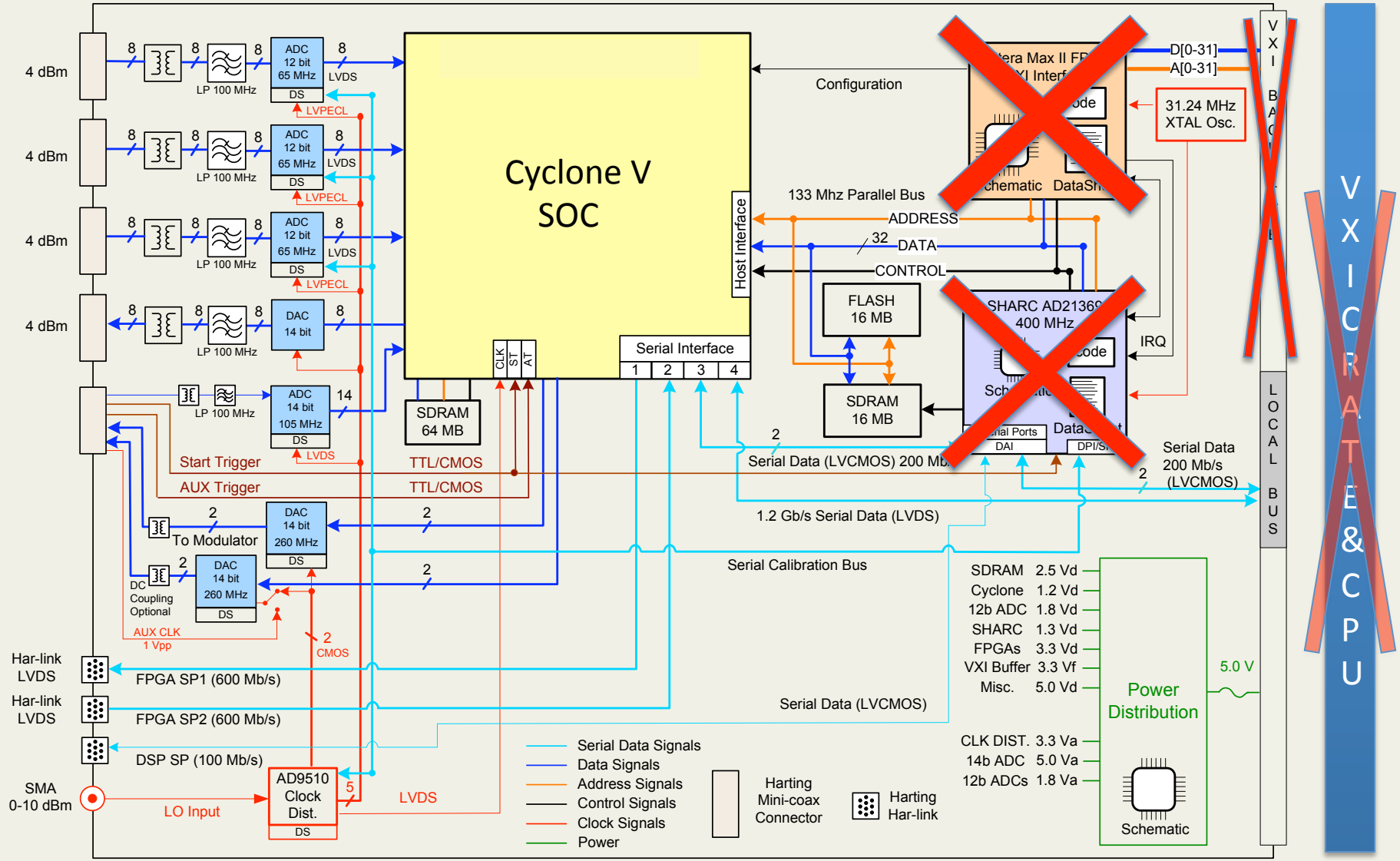

LLRF with System on a Chip

See Philip Varghese's talk this afternoon

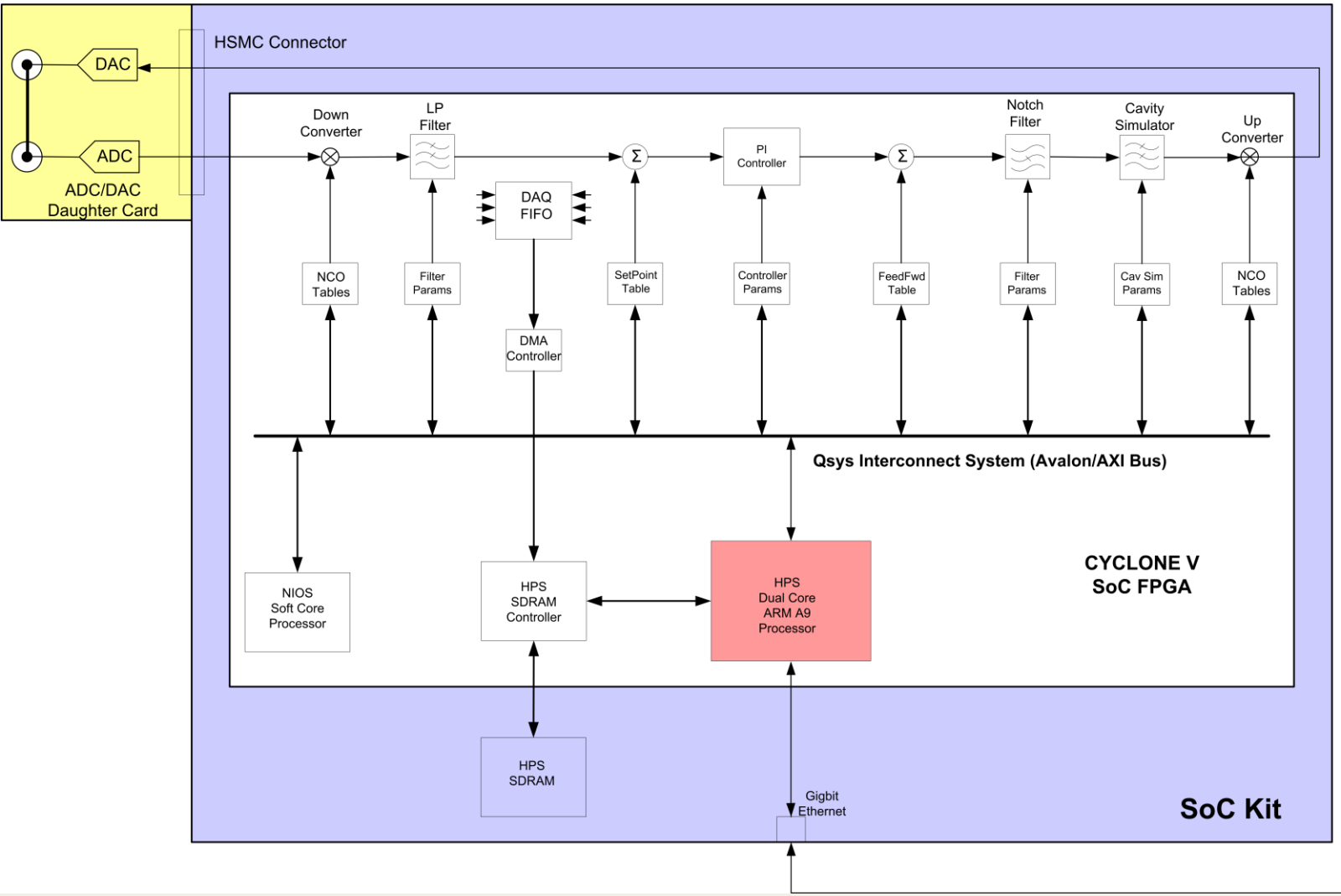

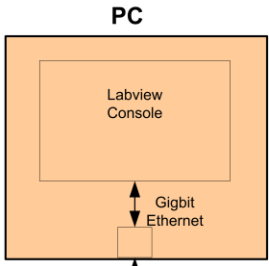

Thank you for your attention!