Towards the next generation LLRF activities @ LBNL

Gang Huang

LLRF workshop

Oct. 1, 2013

BERKELEY LAB
Lawrence Berkeley National Laboratory

LLRF team @ LBNL

Baptiste, Kenneth M
Byrd, John M
Doolittle, Lawrence R
Du, Qiang
Huang, Gang
Jones, John Alexander
Norum, Eric
Ratti, Alessandro
Serrano, Carlos Pareja
Wilcox, Russell B
Stettler, Matthew Werner

BERKELEY LAB
Lawrence Berkeley National Laboratory

Next generation accelerators

- CW Super-conducting LINAC based FEL

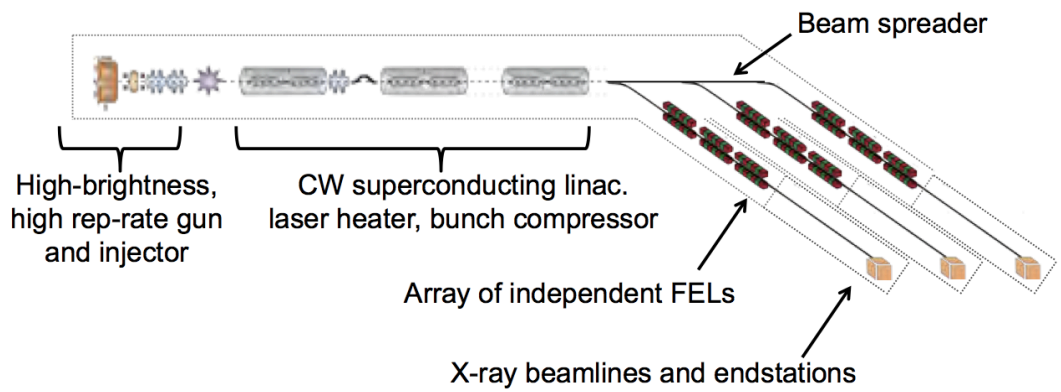

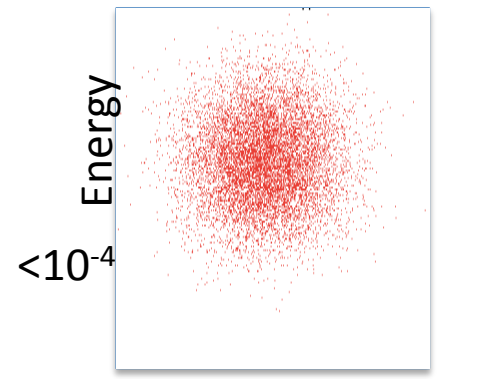

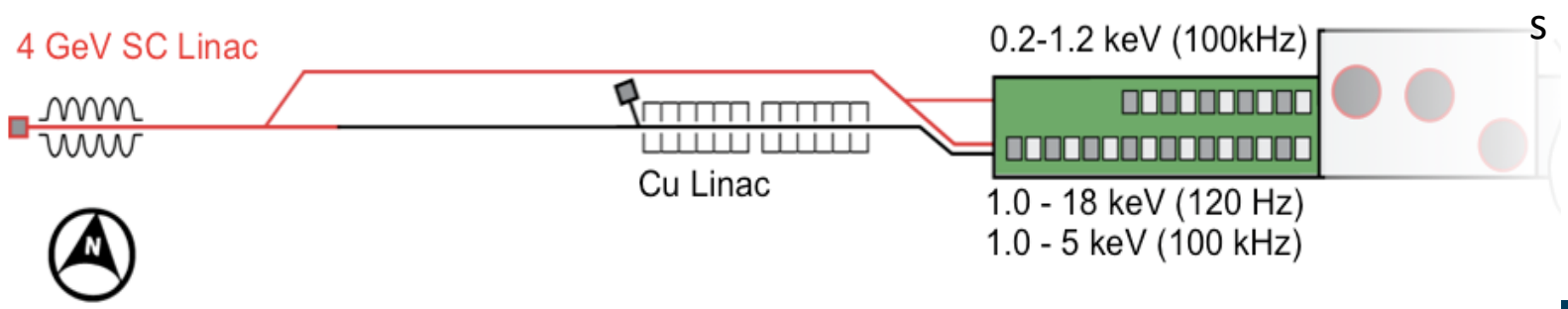

LLRF + Timing + BBF

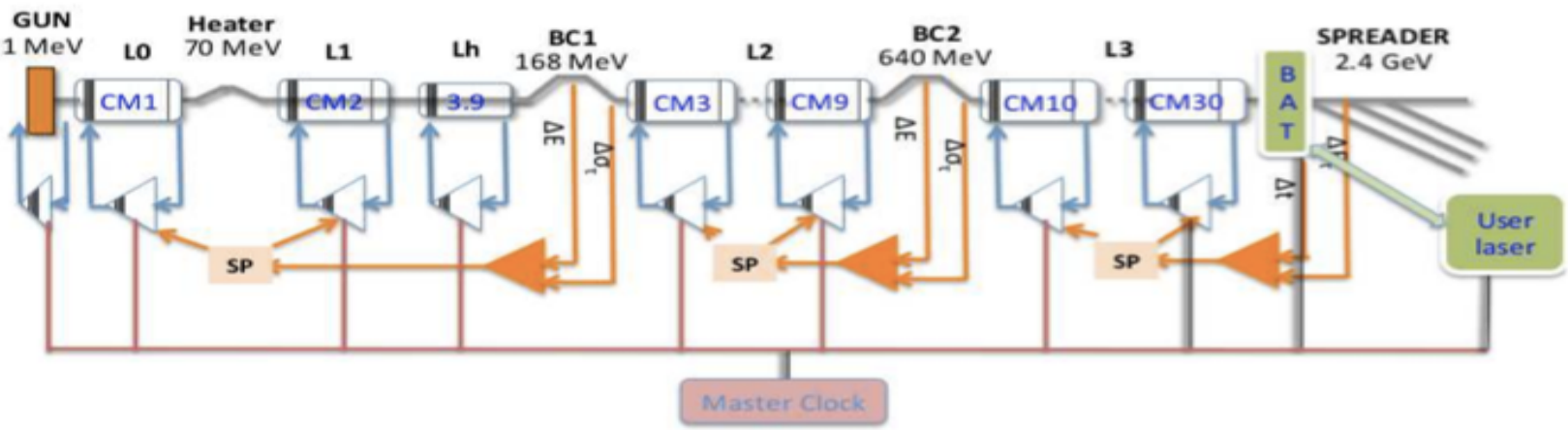

- Highly integrated LLRF, timing and BBF
- Modeling feedback and beam dynamics

Keynote - Applications of X-Ray Light Sources John Byrd
77-New Generation of LLRF and Beam-Based Feedback Stability Models. Carlos Serrano

System design

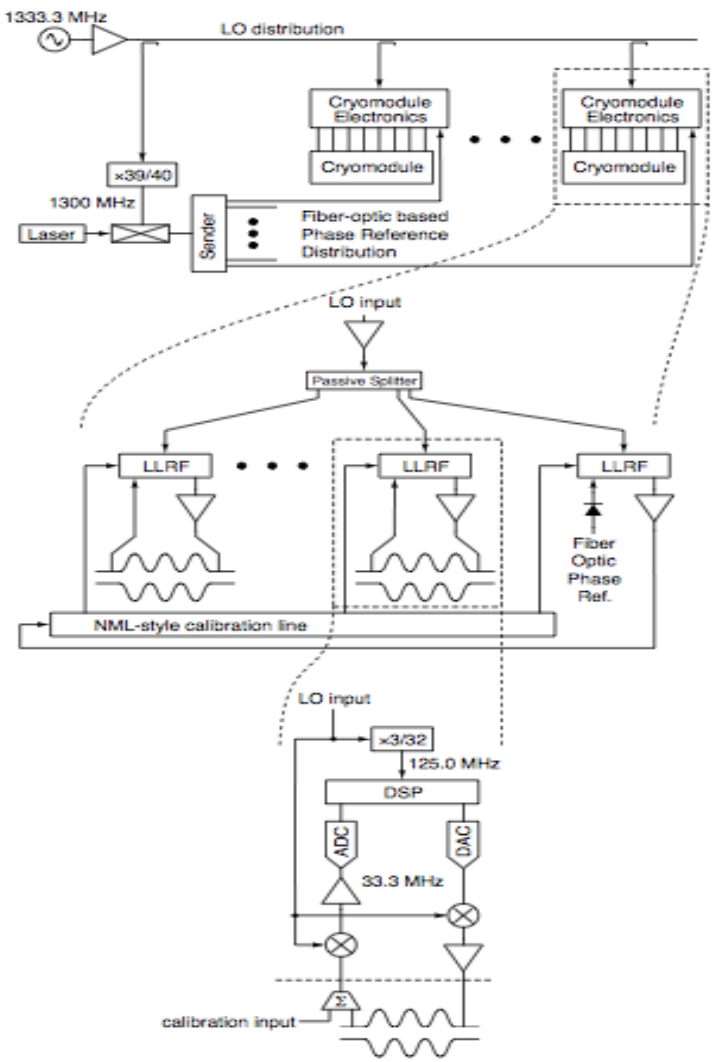

Figure 4. NGLS LLRF design hierarchy

- High precision timing
- RF/LO local distribution
- Drift compensation
- Distortion Compensating

70-Design of RF Controls for Precision CW SRF Light Sources. Larry Doolittle
44-Properties of a Distortion-Compensating Phase Calibration Processor. Larry Doolittle

Hardware/Firmware/Software

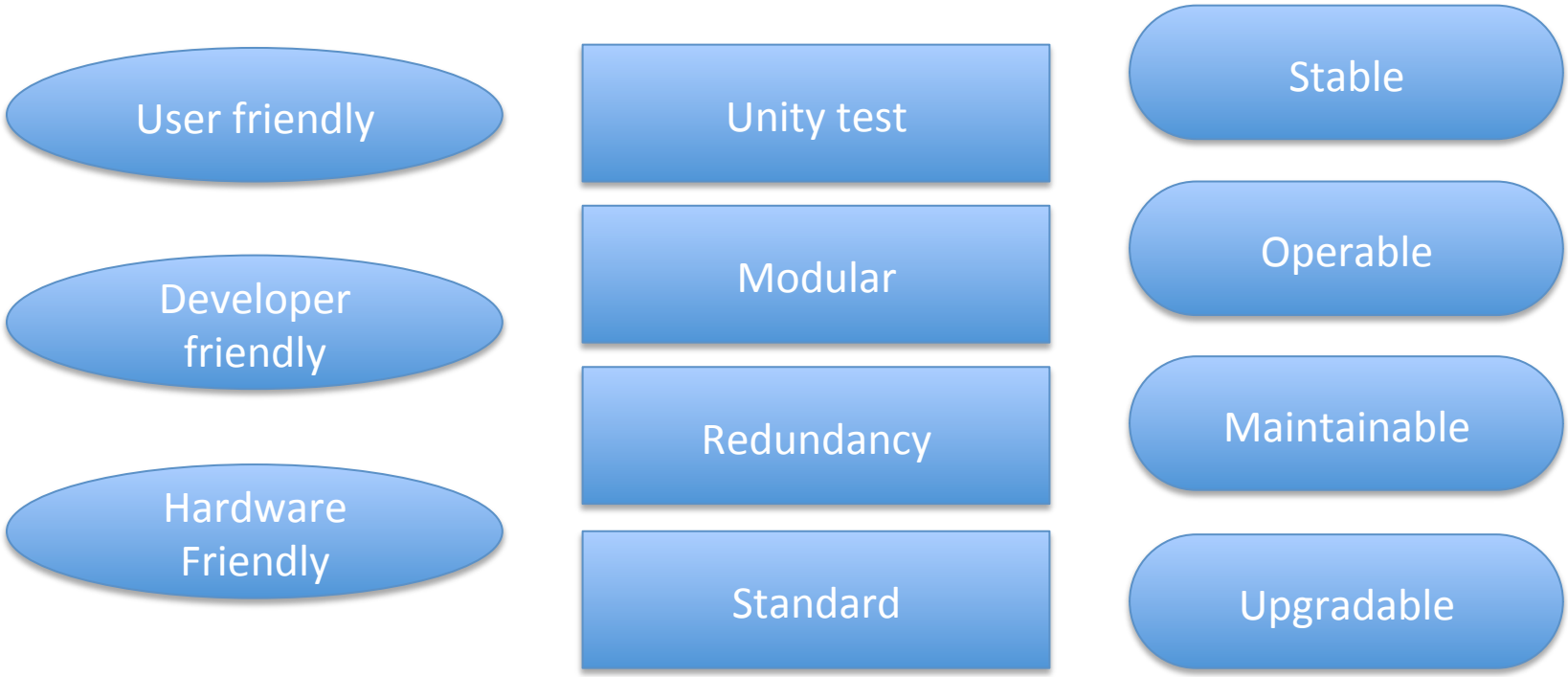

42-Remote FPGA Upgrades with Fail-Safe Booting. Qiang Du
65-Single-source-of-truth coordination of hardware/software development. Gang Huang.
78-FPGA Build Process For Multiple Tasks And Platforms. Carlos Serrano.

BERKELEY LAB
Lawrence Berkeley National Laboratory

LLRF in ALS RF upgrade

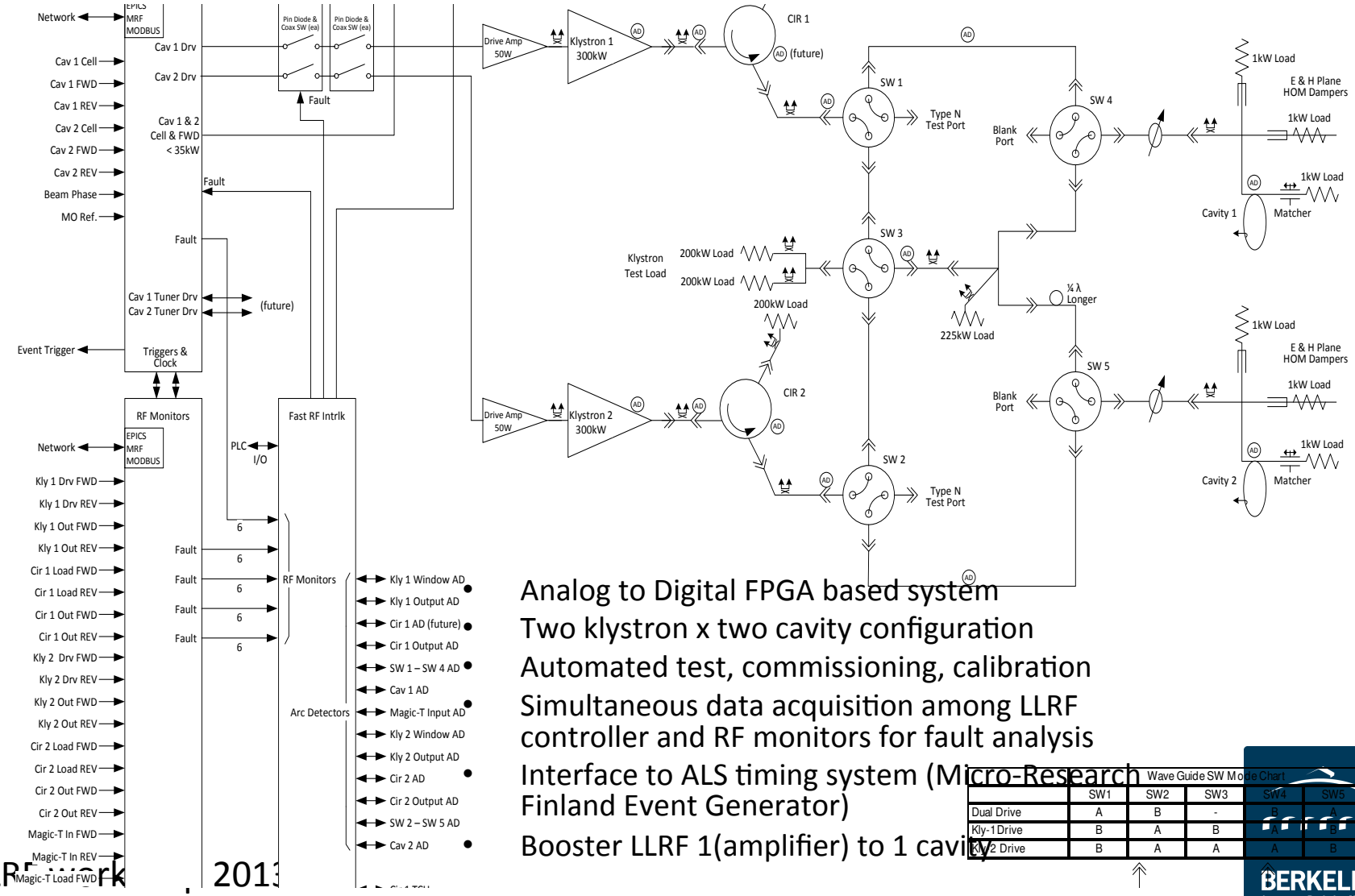

- Analog to Digital FPGA based system
- Two klystron x two cavity configuration
- Automated test, commissioning, calibration
- Simultaneous data acquisition among LLRF controller and RF monitors for fault analysis
- Interface to ALS timing system (Micro-Research Finland Event Generator)
- Booster LLRF 1(amplifier) to 1 cavity

Wave Guide SW Mode Chart

	SW1	SW2	SW3	SW4	SW5
Dual Drive	A	B	-	B	A
Kly-1 Drive	B	A	B	A	B
Kly-2 Drive	B	A	A	A	B

BERKELEY LAB
Lawrence Berkeley National Laboratory

Advanced Photo-injector EXperiment

- Cavity control
- RF monitor
- Laser control

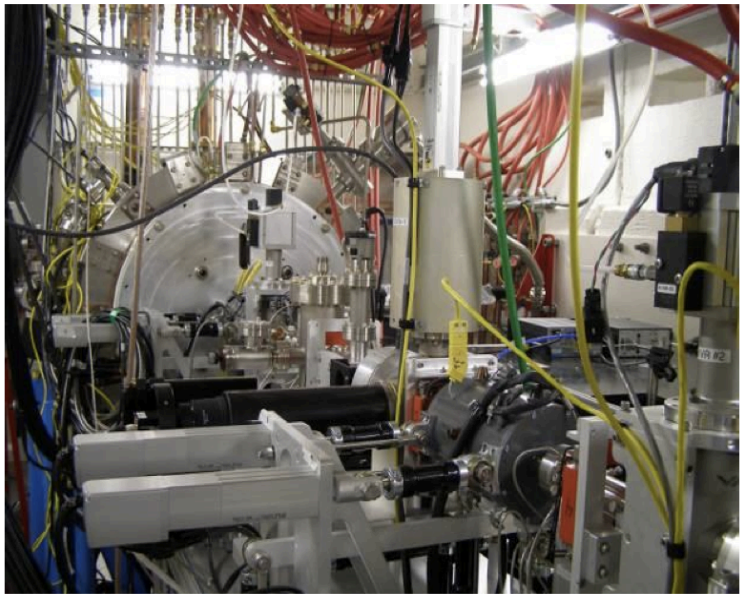

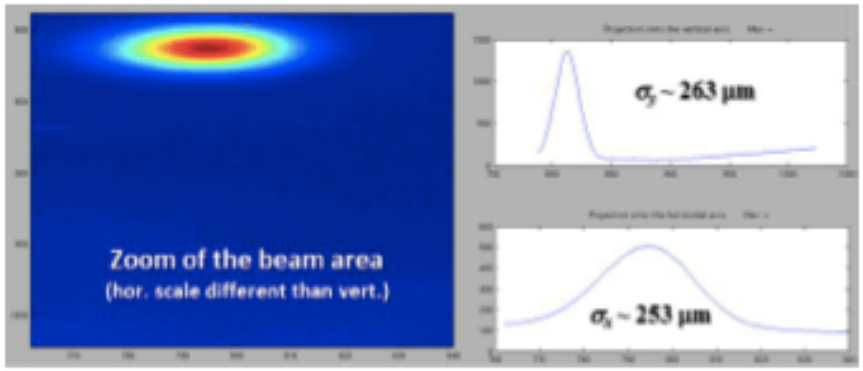

Figure 11: First high-charge beam from a Cs_2Te cathode.

SPX LLRF test @ ANL

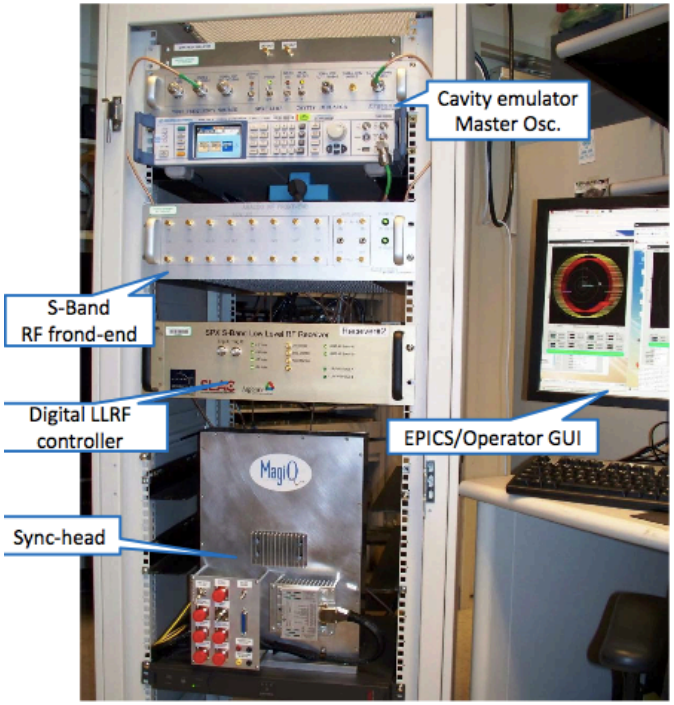

- SPX LLRF tested @ ATLAS
  - high-power test of the super-conducting deflecting cavity in the field with the klystron at ATLAS

73-Precision Low-Level RF System for Short-Pulse X-Ray in the APS Upgrade. Hengjie Ma

More Hands-On Experience

- Participate Jlab CEBAF 12GeV Upgrade cavity commissioning
- Cavity characterization
- Chirp mode

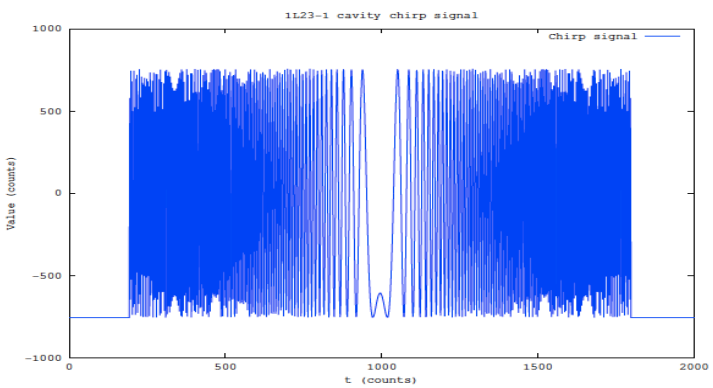

(a) chirp signal

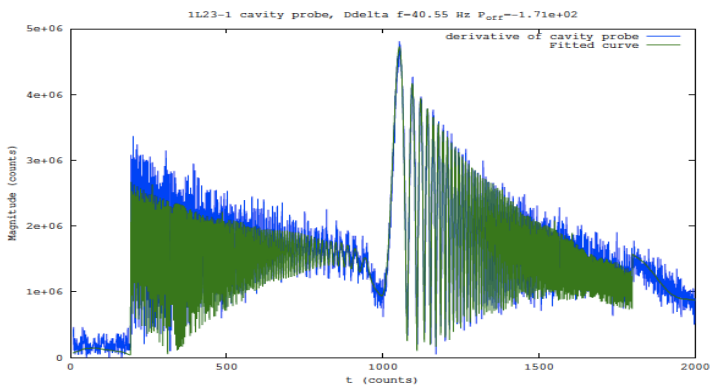

(b) cavity probe signal

Summary

- We developed a model to analysis the need of upcoming CW SC linac based FEL
- We proposed a design to meet the stringent precision and stability needs
- We carefully engineer the Hardware/ firmware/software design
- We developed LLRF system for APEX and SPX@APS-U
- We are ready for the next generation LLRF

BERKELEY LAB
Lawrence Berkeley National Laboratory

Talks and Posters

- 77-New Generation of LLRF and Beam-Based Feedback Stability Models, Carlos Serrano.
- 70-Design of RF Controls for Precision CW SRF Light Sources, Larry Doolittle.
- 44-Properties of a Distortion-Compensating Phase Calibration Processor, Larry Doolittle.
- 42-Remote FPGA Upgrades with Fail-Safe Booting. Qiang Du.
- 65-Single-source-of-truth coordination of hardware/software development. Gang Huang.
- 78-FPGA Build Process For Multiple Tasks And Platforms. Carlos Serrano.
- 73-Precision Low-Level RF System for Short-Pulse X-Ray in the APS Upgrade. Hengjie Ma
- 48-Automatic Cryomodule Characterization with LLRF controller, Qiang Du.