Single Cavity LLRF Controls based on MTCA.4 for normal and superconducting Accelerators.

M. Hoffmann, L. Butkowski, C. Schmidt, H. Schlarb (DESY, Hamburg),
R. Rybaniec, M. Grzegrzolka, I. Rutkowski, (ISE-WUT, Warsaw)

Multi Cavity Configuration.

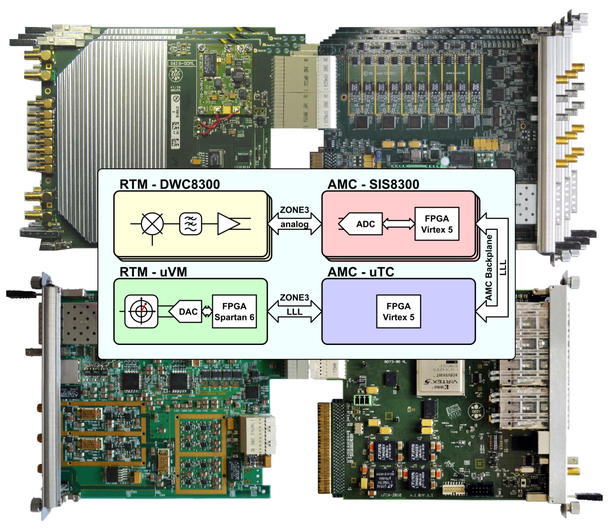

MTCA.4 Development for FLASH/XFEL:

- 3..6x 10 Channel RTM Down-Converter (DRTM-DWC10)
- 3..6x 10 Channel AMC Digitizer (SIS8300)
- 1x AMC Main Controller Board (DAMC-TC7)
- 1x RTM Klystron Drive/Vector Modulator (DRTM-VM2)

Front View of Full Equipped MTCA Crate (ACC23 at FLASH)

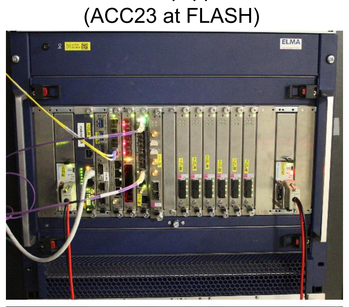

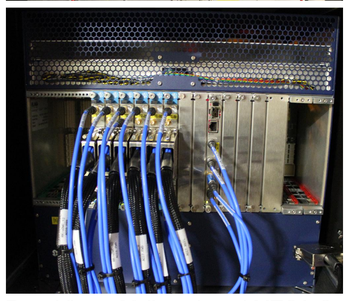

Rear View of full equipped MTCA Crate (ACC23 at FLASH)

Single Cavity Configuration.

Cost and Performance Optimized:

- Combined Hardware DRTM-DWC8VM1 (Down Converter and Vector Modulator)
- More Processing Power on Digitizer Board SIS8300L (Xilinx Virtex 6)
- Less Hardware and Less Latency (no Digital Communication Links, ~400ns Less Latency)

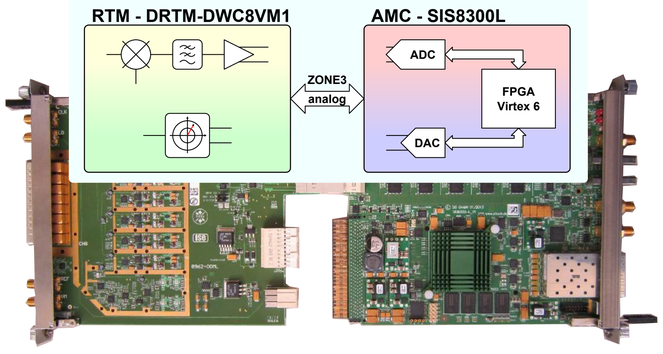

XFEL RF Gun LLRF System

2HE 6 Slot MTCA Crate (Schroff)

REGAE LLRF System

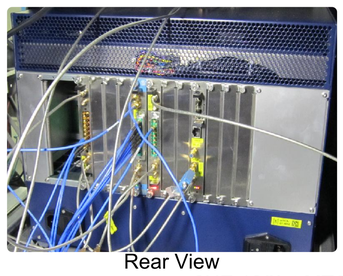

Rear View

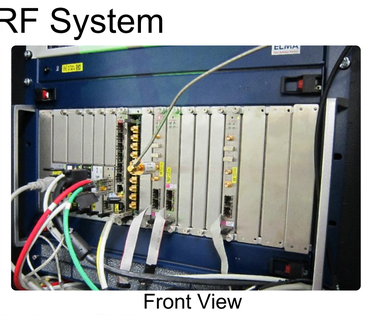

Front View

8HE 12Slot MTCA Crate (ELMA)

Hardware.

DRTM-DWC8VM1

- 8 Down-Converter Channels (0.7..4GHz) (Upgrade: 0.5..6GHz)
- 1 Vector Modulator Channel (0.05..6GHz)
- 2 DC Channels (DC..600MHz)
- Digital Adjustable Attenuators (Input and Output)
- LO, ADC Clock and Reference from Front Panel or RF Backplane
- On-Board Power Level Monitors and I2C support

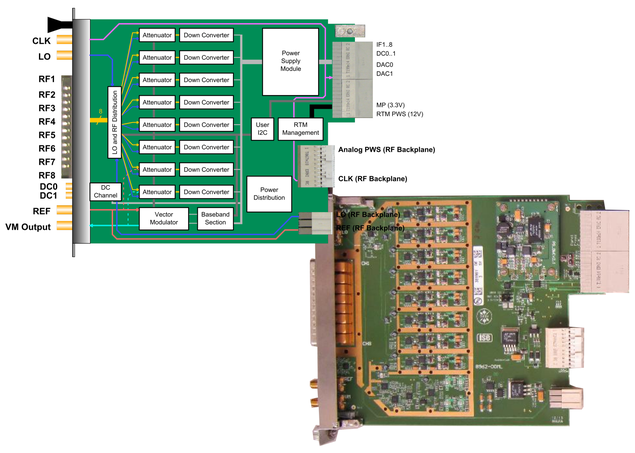

DRTM-DS8VM1

- 8 Analog Input Channels (5..400MHz)
- 1 Vector Modualtor Channel (0.05..6GHz)
- 2 DC Channels (DC..400MHz)
- Digital Adjustable Attenuators (Input and Output)
- ADC Clock and Reference from Front Panel or RF Backplane
- On-Board Power Level Monitors and I2C support
- On-Board Low Jitter PLL Chip for Clock Generation and Distribution

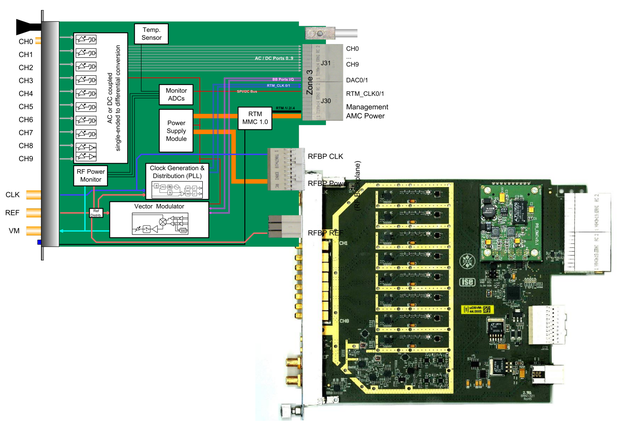

Firmware.

Singe Cavity Controller Firmware:

- Combined Field Detection and Main Controller
- CORDIC for Amplitude and Phase Calculation
- IIR and MIMO Controller
- Full Speed DAQ

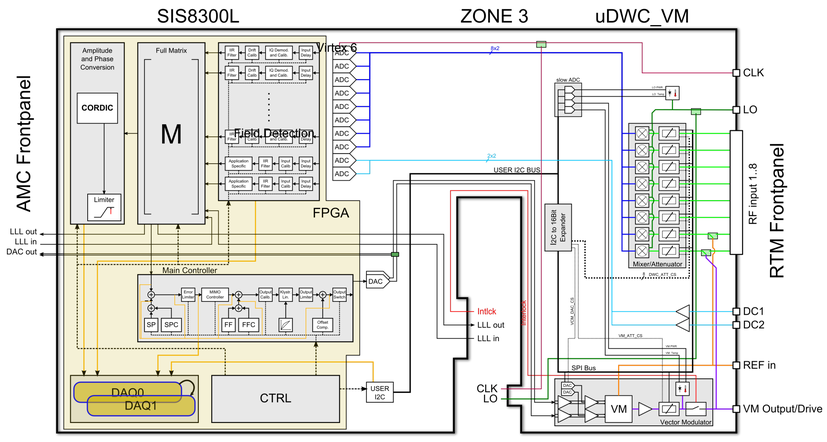

Results from first Test at REGAE.

Delay Budget (old System):

- Klystron Output => 688 ns
- RF Gun Probe => 704 ns
- Controller Input => 1040 ns

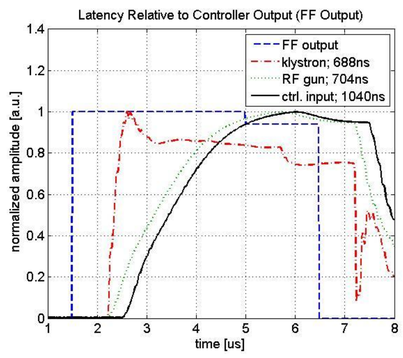

Delay Budget (new System):

- Vector Mod. Output => 360 ns
- RF Gun Probe => 608 ns
- Controller Input => 664 ns

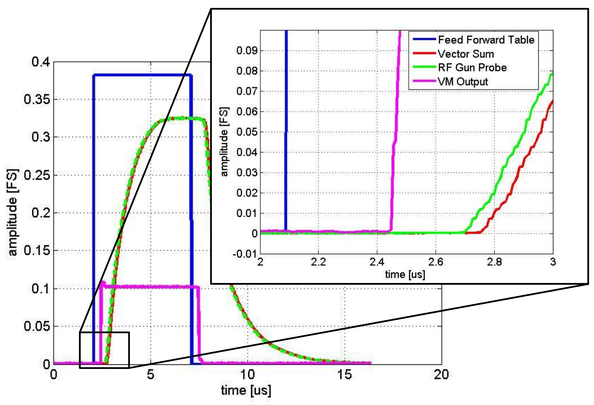

RMS Phase Stability of old LLRF Hardware (w/ and w/o Learning Feed Forward)

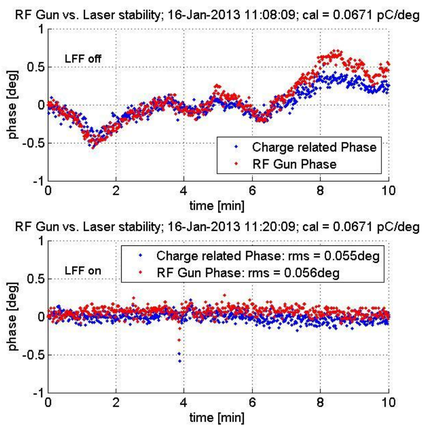

Feedback Gain Scan with new LLRF Hardware

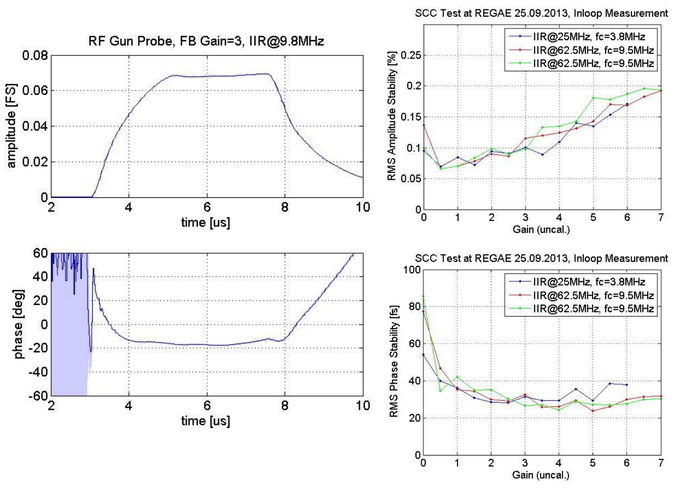

Further Facilities.

PITZ RF Gun

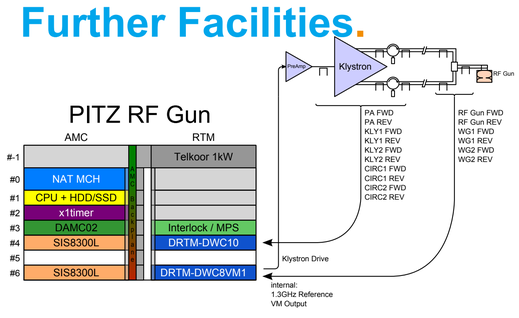

DESY - XFEL/FLASH/PITZ RF Gun

- 1.5-Cell Normal Conductive RF Gun
- 1.3GHz L-Band Structure
- 1.5ms Pulse Length at 10Hz Repetition Rate
- DESY - PITZ BOOSTER (8-Cell Structure)

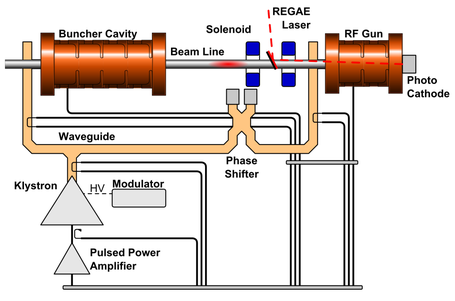

DESY - REGAE RF Gun and Buncher

- Normal Conductive RF Gun (1.5-Cell) and Buncher Cavity (4-Cell)
- 3.0GHz S-Band Structures
- 6us Pulse Length at 50Hz Repetition Rate

DESY - PITZ/XFEL TDS

- 14-Cell Normal Conductive TDS
- 3.0GHz S-Band Structure
- 0.1 to 3.1us Pulse Length at 10Hz Repetition Rate

KIT - FLUTE Facility

- Normal Conductive RF Gun (2.5-Cell) and Linac
- 3.0GHz S-Band Structures
- 5us Pulse Length at 100Hz Repetition Rate
- upgrade with Buncher Cavity

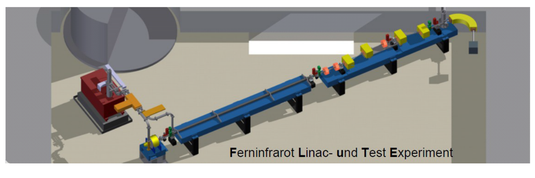

HZDR - ELBE Facility

- 4 TESLA Type Cavities
- 1.3GHz, Super Conductive
- CW Operation

ESS Facility

- Proton Linac, Neutron Source
- 352MHz and 704MHz Cavities
- One Klystron per Cavity
- Normal and Super Conductive Cavities
- 3.5ms Pulse Length at 14Hz Repetion Rate

CANDLE

SINAD

HELMHOLTZ GEMEINSCHAFT

ise

MTCA.4 for Industry and Research

struck innovative systeme