Cryomodule Characterization with LLRF Controller

Qiang Du[1] Lawrence R Doolittle[1] Gang Huang[1] Carlos Serrano Pareja[1] Alessandro Ratti[1] Trent Allison[2] Rama Bachimanchi[2]

[1]Lawrence Berkeley National Laboratory, Berkeley, CA 94720
[2]Thomas Jefferson National Laboratory, Newport News, VA 23606

Abstract

The JLab 12GeV upgrade project has 10 new cryomodules with RF stations to be installed and commissioned on the framework of the existing CEBAF accelerator. Each cryomodule has 8 superconducting radio-frequency (SRF) cavities to be integrated and controlled with digital LLRF controllers. This paper demonstrates an automatic characterization method for commissioning processes using LLRF sampled waveforms, including cavity gradient calibration by reflected RF power falling edge analysis, and cavity detune & phase offset measurement by chirp signal response analysis. Online test results shows $< 3\%$ precision for loaded Q and cavity gradient measurements, and $< 0.5\%$ precision for cavity detune and phase offset measurements.

System setup

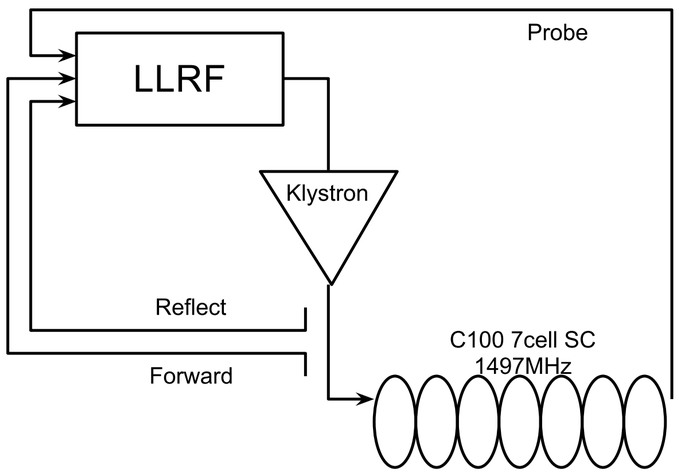

Theory: System transfer function

Transfer function of the cavity:

$$H(s) = \frac{2\alpha s}{s^2 + 2\alpha s + \omega_0^2}$$

where $\omega_0 = 2\pi \cdot 1497\,\text{MHz}$. By adding the quadrature part, the base band system function $H_2(s)$ is:

$$H_2(s) = \frac{2\alpha}{s - (-\alpha + \jmath\omega_{cd})}$$

where $\omega_{cd} = \omega_0 - \sqrt{\omega_0^2 - \alpha^2}$.

Measurement Equations

falling edge analysis

Q_L, Stored energy U, Gradient E, Field Probe Q_{FP}

$$Q_{\text{L}} = \frac{\omega_0}{\Delta\omega} = 4\pi f_0 \tau = 2\pi f_0 \tau_{\text{p}}$$

$$U = \int_0^\infty P_{\text{r}}(t)\text{d}t = P_{\text{RFL}}(t_0) \cdot \tau_{\text{p}}$$

$$E = \sqrt{2\pi f_0 U \cdot \frac{r/Q}{L}}$$

$$Q_{\text{FP}} = \frac{E^2}{P_{\text{TRAN}}} \cdot \frac{L}{r/Q}$$

chirp response fitting

Bandwidth $\Delta\omega$, Gain, Cavity detune & Phase offset

$$\frac{\text{d}y(t)}{\text{d}t} - (-\alpha + \jmath\omega_{cd})y(t) = 2\alpha \cdot x(t)$$

where $x(t)$ is the driver signal, $y(t)$ is cavity probe.

RF power falling edge analysis

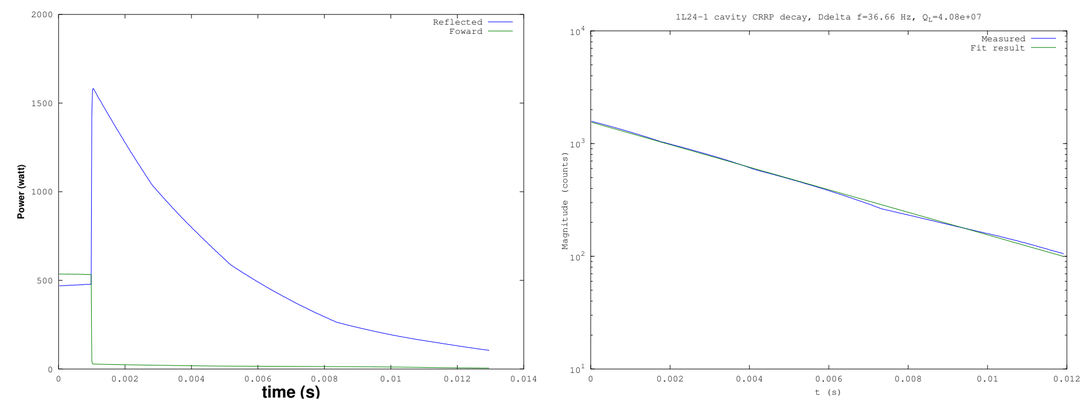

(a) forward & reflected power (b) reflected power decay

Value	# 1	# 2	# 3	Std Error
$\frac{1}{2\pi}\Delta\omega$ (Hz)	45.89	47.73	46.78	1.9%
Q_{L} ($\times 10^7$)	3.26	3.14	3.20	1.9%
U (J)	5.27	5.18	5.21	0.8%
Q_{FP}($\times 10^{12}$)	1.51	1.49	1.49	0.7%
P_{f} (Watt)	436.8	435.4	435.4	0.2%
P_{t} (Watt)	0.033	0.033	0.033	0%
E (MV/m)	7.84	7.78	7.79	0.4%

Table : Decay waveform analysis results for 1L23-1

Chirp response fitting

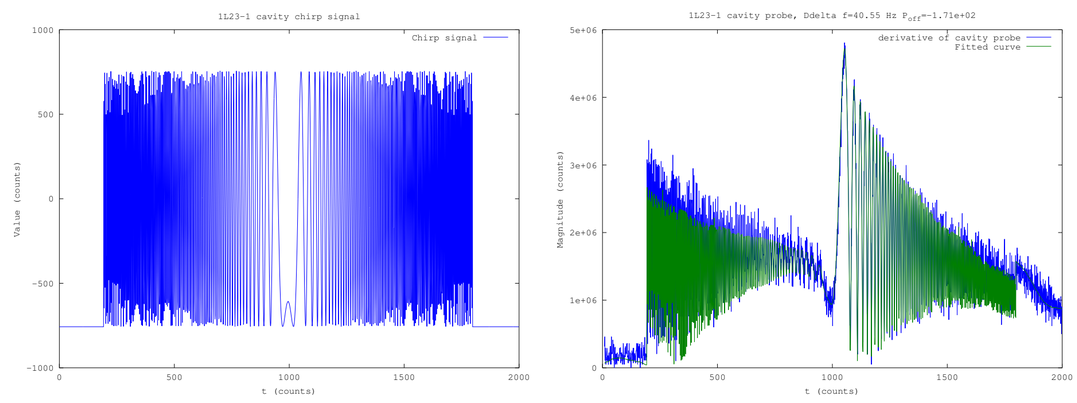

(a) chirp signal (b) cavity probe signal

Value	# 1	# 2	# 3	Std Error
$\frac{1}{2\pi}\Delta\omega$ (Hz)	39.52	41.26	40.60	2.7%
$\frac{1}{2\pi}\omega_{cd}$ (Hz)	267.6	293.4	343.0	12.7%
Gain	19.36	18.53	18.88	2.2%
Phase offset (°)	169.4	169.4	169.6	0.11 °
$\frac{1}{2\pi}\Delta\omega$ (Hz)	39.65	39.44	39.36	0.4%
$\frac{1}{2\pi}\omega_{cd}$ (Hz)	-1397.3	-1404.6	-1400.8	0.3%
Gain	27.11	27.13	27.16	0.1%
Phase offset (°)	-6.9	-6.9	-6.2	0.40 °

Table : Chirp response analysis for 1L23-1 & 1L23-2