Science & Technology Facilities Council

www.scitech.ac.uk

DARESBURY LABORATORY DIGITAL LOW LEVEL RF PROGRESS

P. Corlett, L. Ma, A. Moss, ASTeC, STFC, Daresbury Laboratory, UK.

INTRODUCTION

Since LLRF2011, development of digital Low Level RF systems has continued at Daresbury Laboratory.

A digital system has been operating on the Accelerators and Lasers in Combined Experiments (ALICE) normal conducting buncher cavity for the past 18 months.

New LLRF systems have been produced for use on the superconducting DICC module, and the normal conducting VELA machine

DICC LLRF SYSTEM

CHARACTERISTICS

Frequency = 1.3GHz

Pulse length = 1 – 10ms

PRF = 10 - 20Hz

Amplifier type = 16kW IOT

The Daresbury International Cryomodule Collaboration (DICC) is a 2 cavity cryomodule with the cavities being based on the well established Tesla design, but with 7 cells per cavity.

The module includes ferrite loaded beam pipe HOM absorbers, and fast piezo tuners for Lorenz force detuning compensation

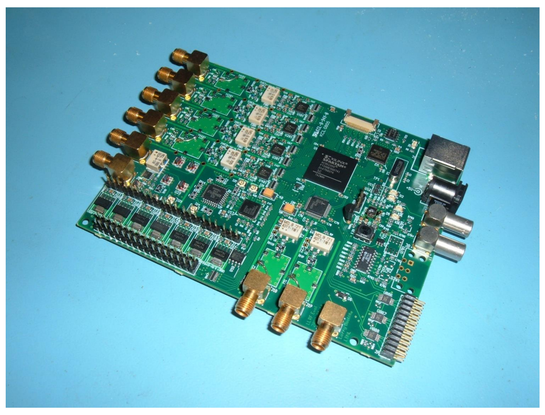

A hardware platform with the LLRF4 (developed by L.Doolittle of LBNL) at its heart has been engineered to stabilise the DICC module RF field. This involved moving the analogue front end components onto a temperature stabilised plate, and integrating the board into a rugged 19" chassis.

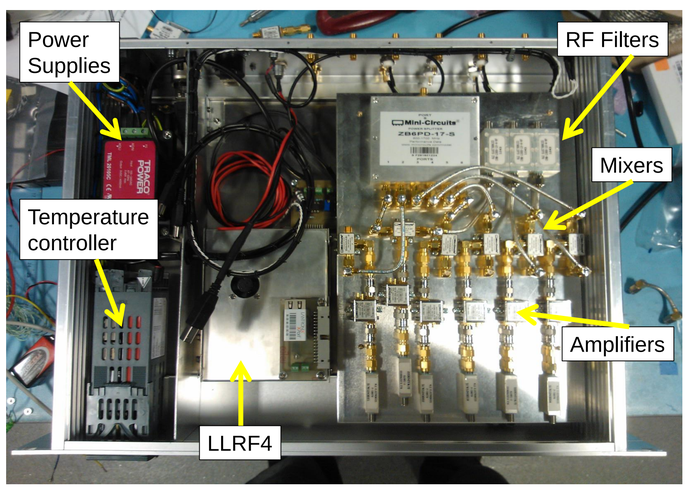

A pair of PI loops provide fast feedback and a feed forward system has been produced to overcome repetitive beam loading effects.

In the laboratory, phase stability of 0.02° RMS has been measured.

VELA LLRF SYSTEM

CHARACTERISTICS

Frequency = 2.9985GHz

Pulse length = 1 – 3μs

PRF = 10Hz

Amplifier type = 10MW Klystron

The Versatile Electron Linear Accelerator (VELA) has a very different control requirement to ALICE.

Due to the very short RF pulse duration of 1 – 3μs, and the long loop delay through a digital system on ~250ns, traditional PID based feedback is not an effective strategy.

A new hardware platform was produced based upon the ALICE design, but incorporating an analogue front end optimised for 3GHz operation.

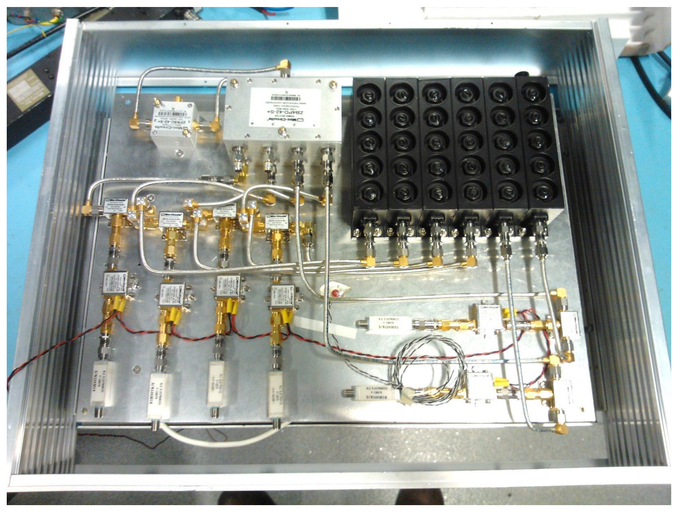

Currently, the system operates in open loop mode only, but it is intended that a pulse to pulse feedback will be implemented along side a cable calibration routine to account for phase drifts within the RF system.

The VELA LLRF system has been operating for the past 6 months, enabling commissioning of the machine with beam.

HOST COMPUTER

The ALICE and VELA high level control systems are based upon EPICS. A host computer was required to communicate over USB with the FPGA, interpret and sort the data, and publish data to process variables on the EPICS network.

A Dell Poweredge R210 server was sourced and loaded with Scientific Linux 6.3. This is connected to the LLRF4 board via USB and to the controls network.

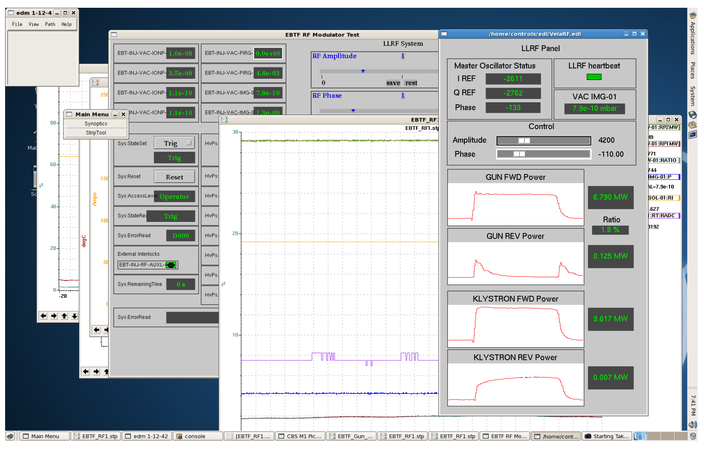

The software layer enabling communication between the FPGA and the server was purchased from DIMTEL, this provides a shared memory space on the FPGA which can be accessed from the host computer. A Python application then sorts the data from the memory into a useable form and publishes it to EPICS, where an EDM panel is presented to the operator. The Python application also provides an "expert" GUI not available to operators.

Science & Technology Facilities Council ASTeC

FUTURE WORK

VELA cable calibration

A cable calibration loop is planned for implementation in the VELA machine. In the intervals between RF pulses, this will measure the phase length of the RF drive and feedback cables and apply a phase shift to compensate for long term temperature drifts.

Hardware has been produced to facilitate routing of RF signals in between pulses, and firmware development is continuing.

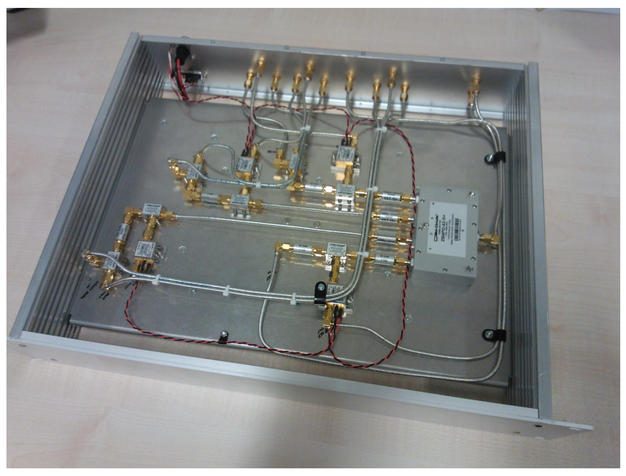

Master Oscillator Phase stabilisation

An on-going issue with the ALICE machine is drifts on the synchronisation between the 1.3GHz RF frequency and the 81.25MHz laser reference.

An existing system uses analogue methods to measure the phase difference between the 2 signals and apply a correction to a motorised mechanical phase shifter. This will be replaced with a system based around the LLRF4 board, making measurements of phase of the laser reference, and detected laser light pulses, and correcting for drifts.

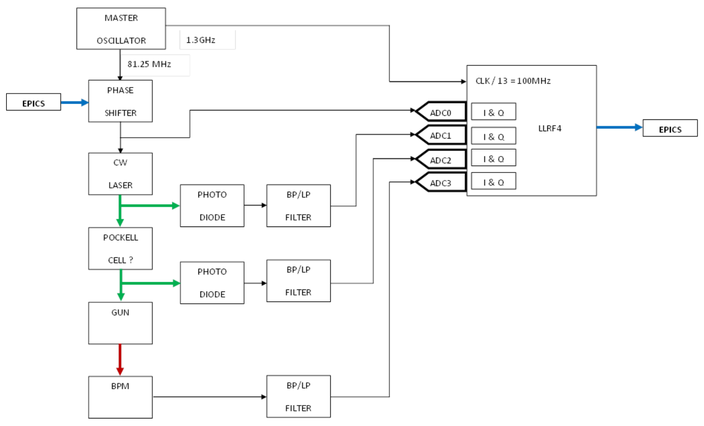

LFD Piezo compensation

The DICC module incorporates fast Piezo tuners capable of supressing Lorenz force detuning at the start of the RF pulse.

Fermi National Laboratory are providing assistance in implementing a Piezo compensation system on the DICC module.

Thanks

The authors would like to give thanks to :

L.Doolittle of LBNL for providing assistance with the LLRF4 board.

DIMTEL for providing the USB interfacing code.

FERMILAB for providing piezo compensation code and assistance.