LLRF Iterative Learning Controller for TRIUMF ARIEL Superconducting cavities

TRIUMF

Canada's national laboratory for particle and nuclear physics
Laboratoire national canadien pour la recherche en physique nucléaire
et en physique des particules

K. Fong, M. Laverty, Q.W. Zheng, *TRIUMF*

Abstract

The TRIUMF ARIEL superconducting cavities must be able to operate with cw beam or pulsed beam. To achieve the necessary degree of field regulation under heavy beam loading conditions, adaptive feed-forward control such as Iterative Learning Controller must be used. The stability regime for beam loading is quite different from most ILC investigated in literature, where only the disturbance is often the setpoint changes. Theoretical formulations and Numerical simulations have shown that using a non-causal moving average filter of only a few time samples can provide rapid convergence and stability.

Beam loading Equation

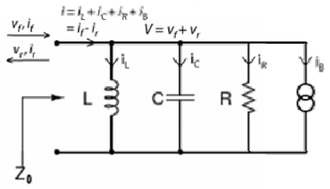

$$\frac{di}{dt} = \frac{di_C}{dt} + \frac{di_R}{dt} + \frac{di_L}{dt} + \frac{di_B}{dt} = C\frac{d^2V}{dt^2} + \frac{1}{R}\frac{dV}{dt} + \frac{1}{L}V + \frac{di_B}{dt}$$

$$V \equiv V\cos\omega t = \left(Ve^{j\omega t}\right)$$
$$v_f \equiv v_f \cos\omega t = \left(v_f e^{j\omega t}\right)$$
$$i_B \equiv i_B \cos(\omega t + \phi) = \left(i_B e^{j\omega t + j\phi}\right)$$

$$V \cong \frac{\Gamma + 1}{s\tau + 1 - j\Delta\omega\tau}\left(v_f - \frac{i_B Z_0 e^{j\phi}}{2}\right) \qquad \Delta\omega \equiv \omega - \omega_0$$

LTI system

$$y_k(t) = P(z)u_k(t) + y_0(t)$$

k defines the repetition domain

t is the normal time domain

P is the plant transfer function, which in our case is the closed loop gain.

First order PD update rule

$$u_{k+1}(t) = Q(z)\left(u_k(t) + L(z)e_k(t+1)\right)$$

State space representation

$$x_k(j+1) = \mathbf{A}x_k(j) + \mathbf{B}u_k(j)$$
$$y_k(j) = \mathbf{C}x_k(t) \qquad \mathbf{P}(z) = \mathbf{C}(z\mathbf{I} - \mathbf{A})^{-1}\mathbf{B}$$

"Lifted vector" Framework

$$\mathbf{U_k} = [u_k(0), u_k(1), u_k(2), \cdots, u_k(N-1)]^{\mathrm{T}}$$
$$\mathbf{Y_k} = [y_k(m), y_k(m+1), y_k(m+2), \cdots, y_k(m+N-1)]^{\mathrm{T}}$$
$$\mathbf{E_k} \equiv [e_k(m), e_k(m+1), e_k(m+2), \cdots e_k(m+N-1)]^{\mathrm{T}}$$

Causal Learning filter

$$\mathbf{L} = \begin{bmatrix} L_m & 0 & 0 & \cdots & 0 \\ L_{m+1} & L_m & & & 0 \\ L_{m+2} & L_{m+1} & L_m & & 0 \\ \vdots & \vdots & \vdots & \ddots & \vdots \\ L_{mN-1} & L_{mN-2} & L_{mN-3} & \cdots & L_m \end{bmatrix}$$

Non-Causal time invariant averaging filter

$$\mathbf{L} = \begin{bmatrix} K & K & K & 0 & \cdots & 0 & 0 & 0 & 0 \\ 0 & K & K & K & \cdots & 0 & 0 & 0 & 0 \\ 0 & 0 & K & K & \cdots & 0 & 0 & 0 & 0 \\ 0 & 0 & 0 & K & \cdots & 0 & 0 & 0 & 0 \\ \vdots & \vdots & \vdots & \vdots & \ddots & \vdots & \vdots & \vdots & \vdots \\ 0 & 0 & 0 & 0 & \cdots & K & K & K & 0 \\ 0 & 0 & 0 & 0 & \cdots & 0 & K & K & K \\ 0 & 0 & 0 & 0 & \cdots & 0 & 0 & K & K \\ 0 & 0 & 0 & 0 & \cdots & 0 & 0 & 0 & K \end{bmatrix}$$

e.g. $u_{k+1}(t) = u_k(t) + K\left[e_k(t+1) + e_k(t+2) + e_k(t+3)\right]$

Asymptotic stable[1,2]

$\lim_{k\to\infty}\|u_k\|$ is defined $\longrightarrow$ Spectral radius $\max_k \left|\lambda_i\left(\mathbf{Q}(\mathbf{I} - \mathbf{LP})\right)\right| < 1$

frequency domain $\sup_{\omega\in[0,\pi]} \lambda\left(Q\left(e^{j\omega}\right)\left(1 - e^{j\omega}L\left(e^{j\omega}\right)P\left(e^{j\omega}\right)\right)\right) < 1$

Robust monotonic convergence[1,2]

$\|e_\infty - e_{k+1}\|_2 \le \gamma\|e_\infty - e_k\|_2 \quad 0 \le \gamma < 1 \longrightarrow$ Maximum singular value

$$\max_k \left|\sqrt{\lambda_i\left(\left[\mathbf{PQ}(\mathbf{I} - \mathbf{LP})\mathbf{P}^{-1}\right]^{\mathrm{T}}\left[\mathbf{PQ}(\mathbf{I} - \mathbf{LP})\mathbf{P}^{-1}\right]\right)}\right| < 1$$ for error

Frequency domain $\sup_{\omega\in[0,\pi]} \left|Q\left(e^{j\omega}\right)\left(1 - e^{j\omega}L\left(e^{j\omega}\right)P\left(e^{j\omega}\right)\right)\right| < 1$

$\|U_\infty(z) - U_{k+1}(z)\|_2 \le \gamma\|U_\infty(z) - U_k(z)\|_2$

$$\max_k \left|\sqrt{\lambda_i\left(\left[\mathbf{Q}(\mathbf{I} - \mathbf{LP})\right]^{\mathrm{T}}\left[\mathbf{Q}(\mathbf{I} - \mathbf{LP})\right]\right)}\right| < 1$$ for control effort

Hardware/Software Block Diagram

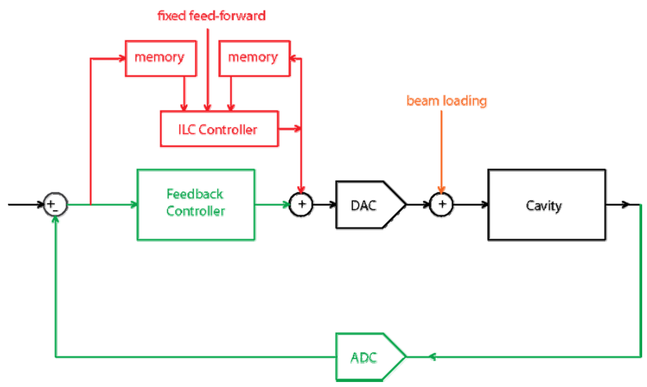

Z-domain Block Diagram

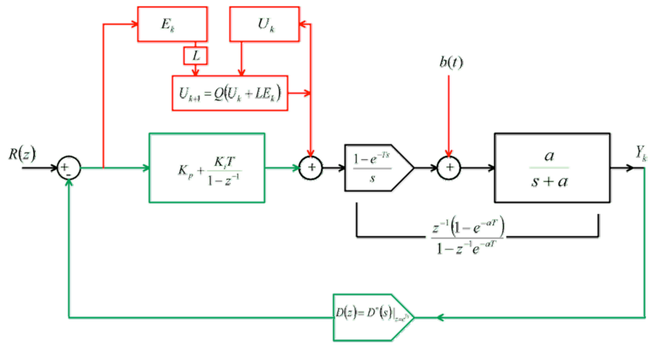

$$P(z)\frac{\frac{(1 - e^{-aT})}{z - e^{-aT}}}{1 + \frac{(1 - e^{-aT})}{z - e^{-aT}}\left(K_p + \frac{zK_iT}{z - 1}\right)} = \frac{(1 - e^{-aT})(z - 1)}{z - 1 + (1 - e^{-aT})\left[(K_p + K_i)z - K_p\right]}$$

Proportional Gain only

$$\mathbf{P} = aTK_p\begin{bmatrix} 1 & 0 & 0 & 0 & \cdots & 0 \\ [1 - aT(1 + K_p)] & 1 & 0 & 0 & \cdots & 0 \\ [1 - aT(1 + K_p)]^2 & [1 - aT(1 + K_p)] & 1 & 0 & \cdots & 0 \\ [1 - aT(1 + K_p)]^3 & [1 - aT(1 + K_p)]^2 & [1 - aT(1 + K_p)] & 1 & \cdots & 0 \\ \vdots & \cdots & \cdots & \cdots & \ddots & \vdots \\ [1 - aT(1 + K_p)]^{N-1} & \cdots & [1 - aT(1 + K_p)]^3 & [1 - aT(1 + K_p)]^2 & [1 - aT(1 + K_p)] & 1 \end{bmatrix}$$

P is always a lower triangular Toeplitz Matrix

Time-domain Block Diagram

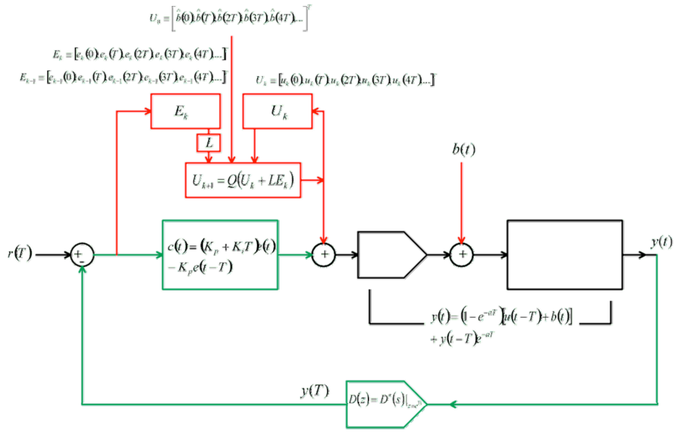

Simulation Results

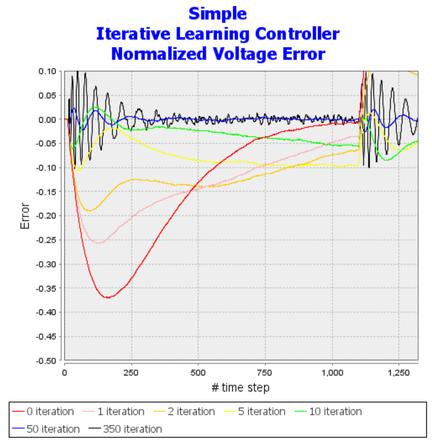

Exhibit bad learning transient behavior

$$LE_k = \begin{bmatrix} 1 & 0 & 0 & & \cdots \\ 0 & 1 & 0 & & \\ 0 & 0 & 1 & & \\ & & & 1 & \\ \vdots & & & & \ddots \end{bmatrix}\begin{bmatrix} e_k(0) \\ e_k(T) \\ e_k(2T) \\ \\ \vdots \end{bmatrix}$$

$$u_{k+1}(t) = u_k(t) + e_k(t)$$
$$Q(z) = I$$

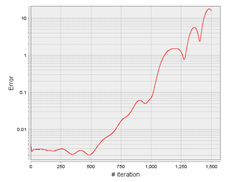

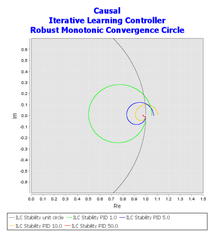

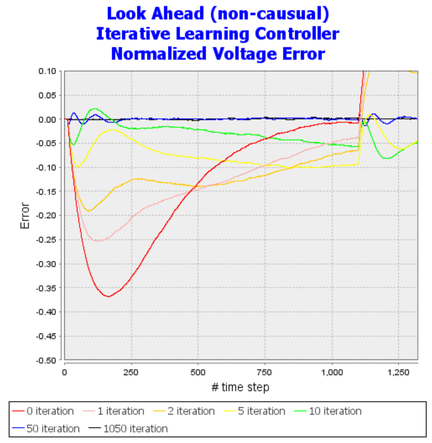

$$LE_k = \begin{bmatrix} \frac{1}{3} & \frac{1}{3} & \frac{1}{3} & 0 & 0 & 0 & \cdots \\ 0 & \frac{1}{3} & \frac{1}{3} & \frac{1}{3} & 0 & 0 & \cdots \\ 0 & 0 & \frac{1}{3} & \frac{1}{3} & \frac{1}{3} & 0 & \cdots \\ 0 & 0 & 0 & \frac{1}{3} & \frac{1}{3} & \frac{1}{3} & \\ 0 & 0 & 0 & 0 & \frac{1}{3} & \frac{1}{3} & \\ 0 & 0 & 0 & 0 & 0 & \frac{1}{3} & \\ \vdots & \vdots & \vdots & \vdots & \vdots & & \ddots \end{bmatrix}\begin{bmatrix} e_k(0) \\ e_k(T) \\ e_k(2T) \\ \\ \vdots \end{bmatrix}$$

$$u_{k+1}(t) = u_k(t) + \frac{1}{3}\left[e_k(t+1) + e_k(t+2) + e_k(t+3)\right]$$

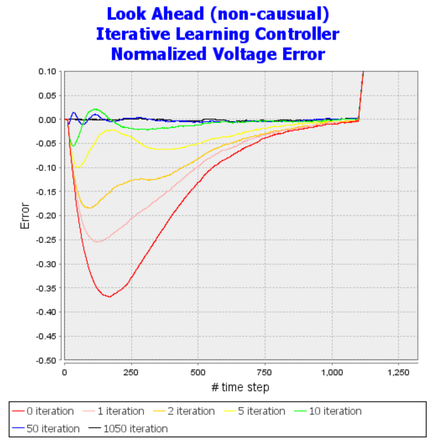

ILC stopped at j=300

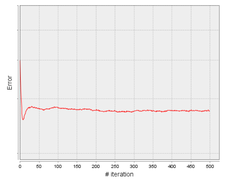

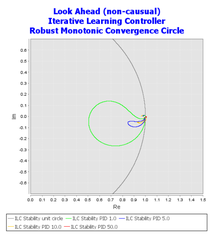

References

1. Mikael Norrlof and Svante Gunnarsson, "Time and frequency domain convergence properties in iterative learning control", Int. J. Control, 2002, Vol. 75, No. 14 1114-1126.
2. D.A. Bristow, M.Tharayil and A.Alleyne, "A survey of iteratiive learning control (a learning-based method for high-performance tracking control)", IEEE Control Systems Magazine, June 2006.