Properties of a Distortion-Compensating Phase Calibration Processor

Larry Doolittle

Lawrence Berkeley National Laboratory

LLRF13, Lake Tahoe, October 2013

Index

1. Introduction
2. Distortion and Noise
3. Implementation
4. Conclusions

Motivation

How can our feedback processors accurately determine the vector of fundamental RF picked up by the cavity Field Probe?

- Downconvert
  - High signal levels generate distortion in mixer
  - Low signal levels have high white background noise
- Direct sample
  - Relatively large contribution from clock jitter
  - Noise integrated over full T/H bandwidth
- Sigma Delta?
  - Not for sale

Accurate (Relative) Phase Measurement

Digitize the reference!

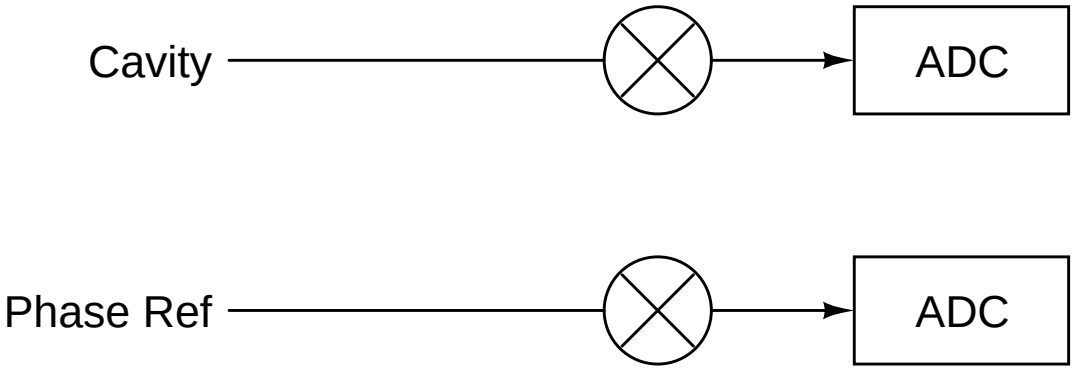

Accurate (Relative) Phase Measurement

Calibrate long cables and active components *in-situ*!

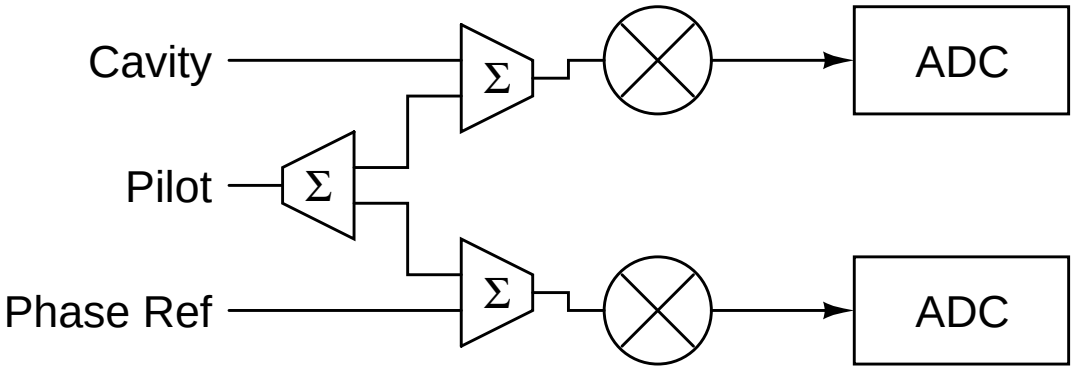

Noise Power Density

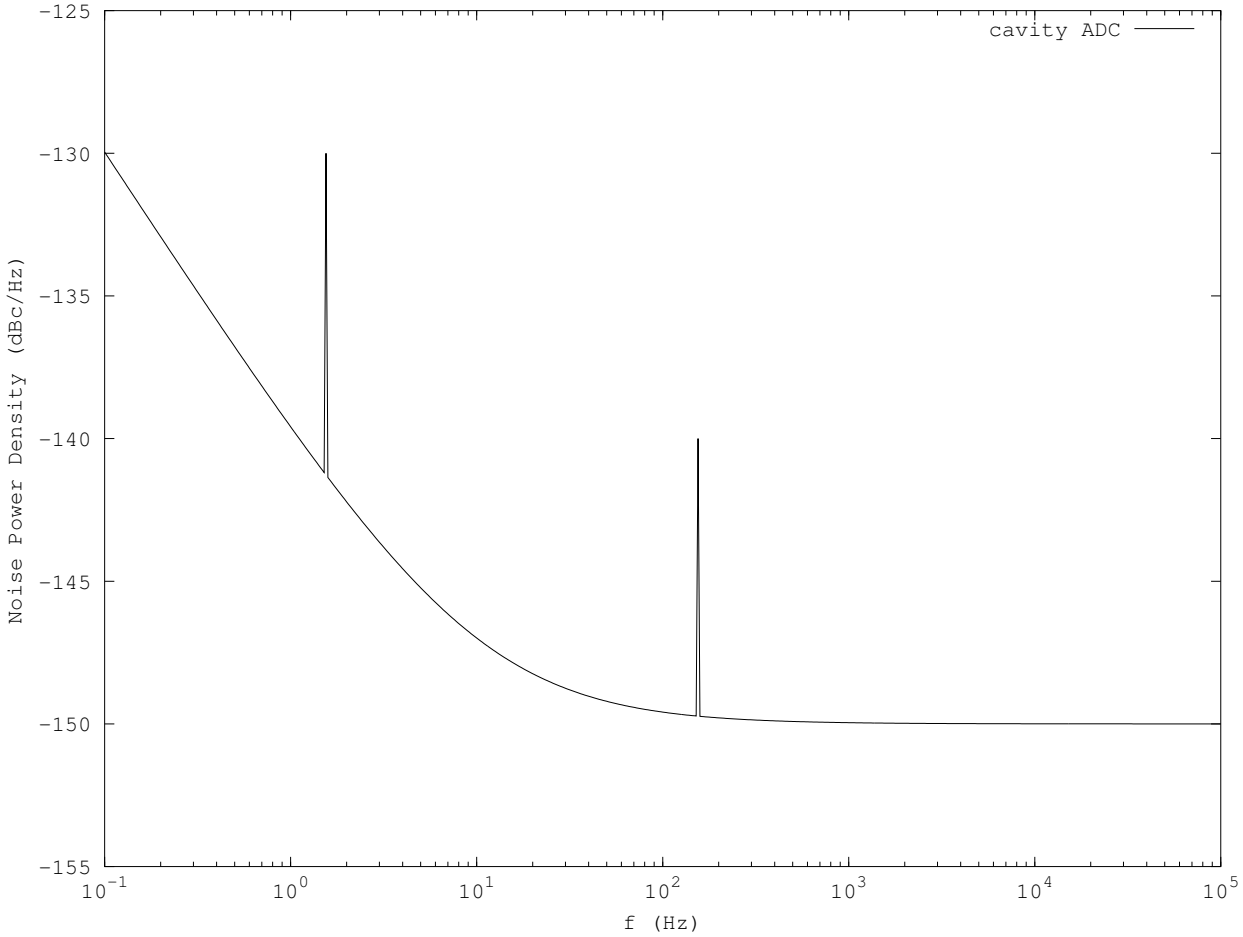

Noise Power Density

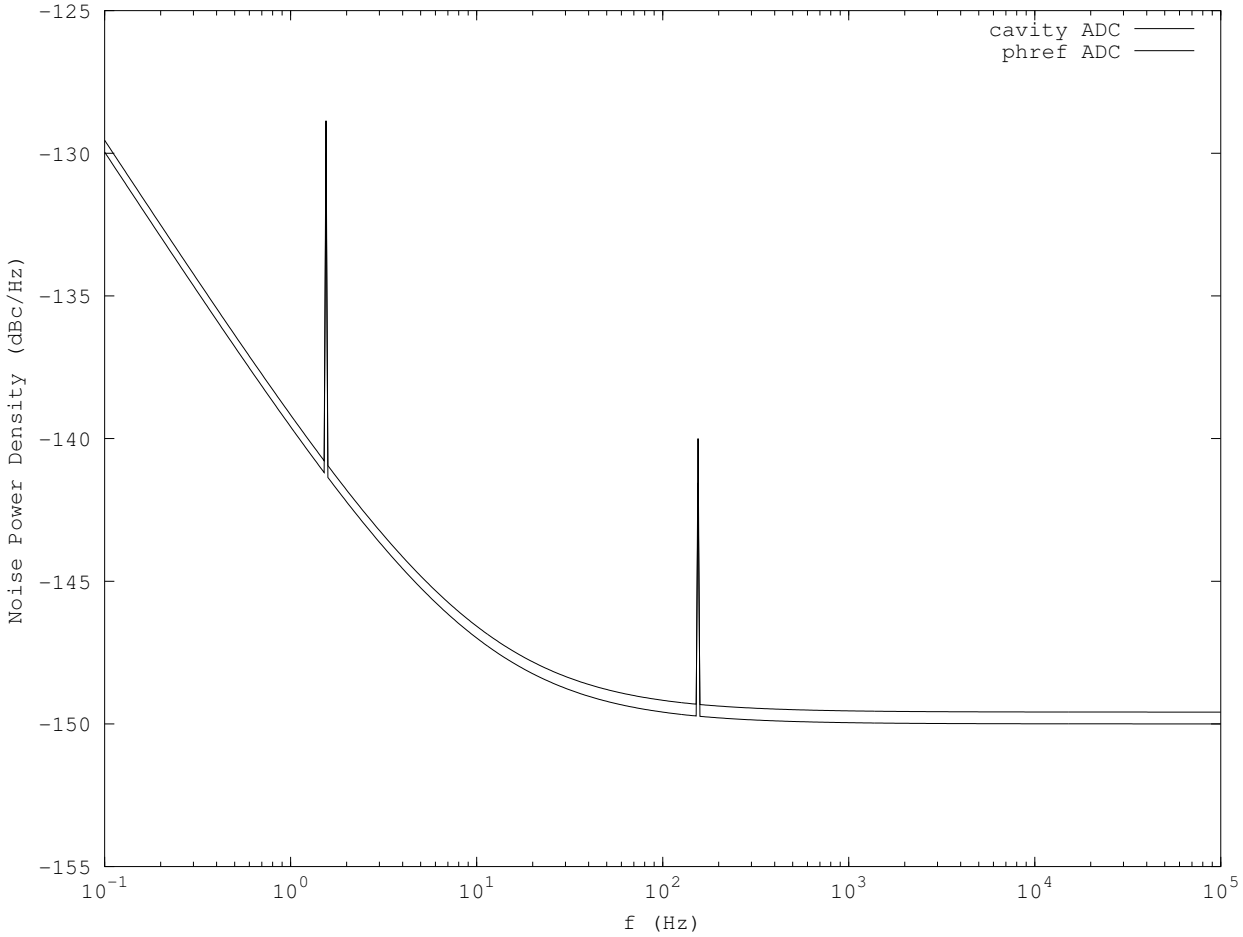

Noise Power Density

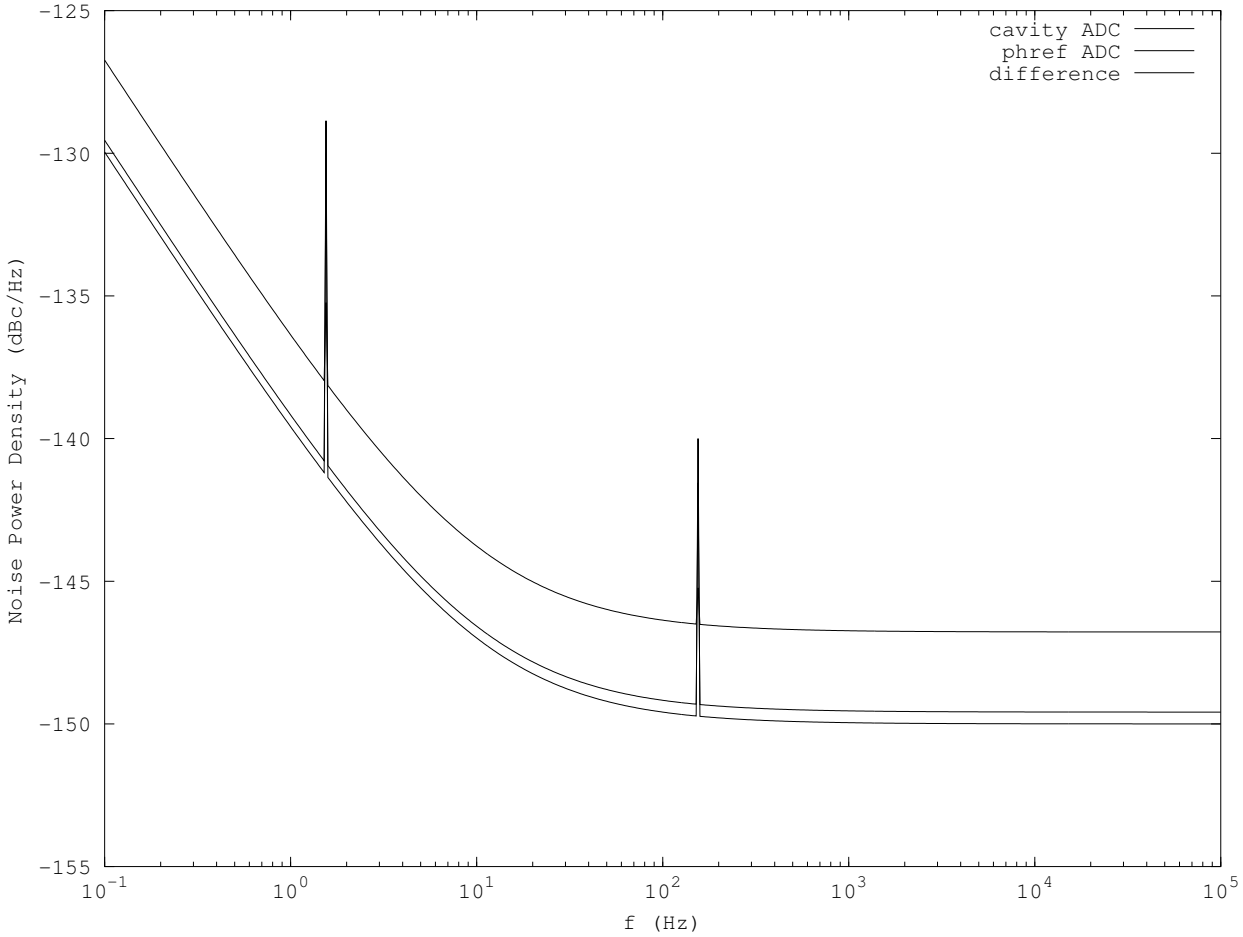

Noise Power Density

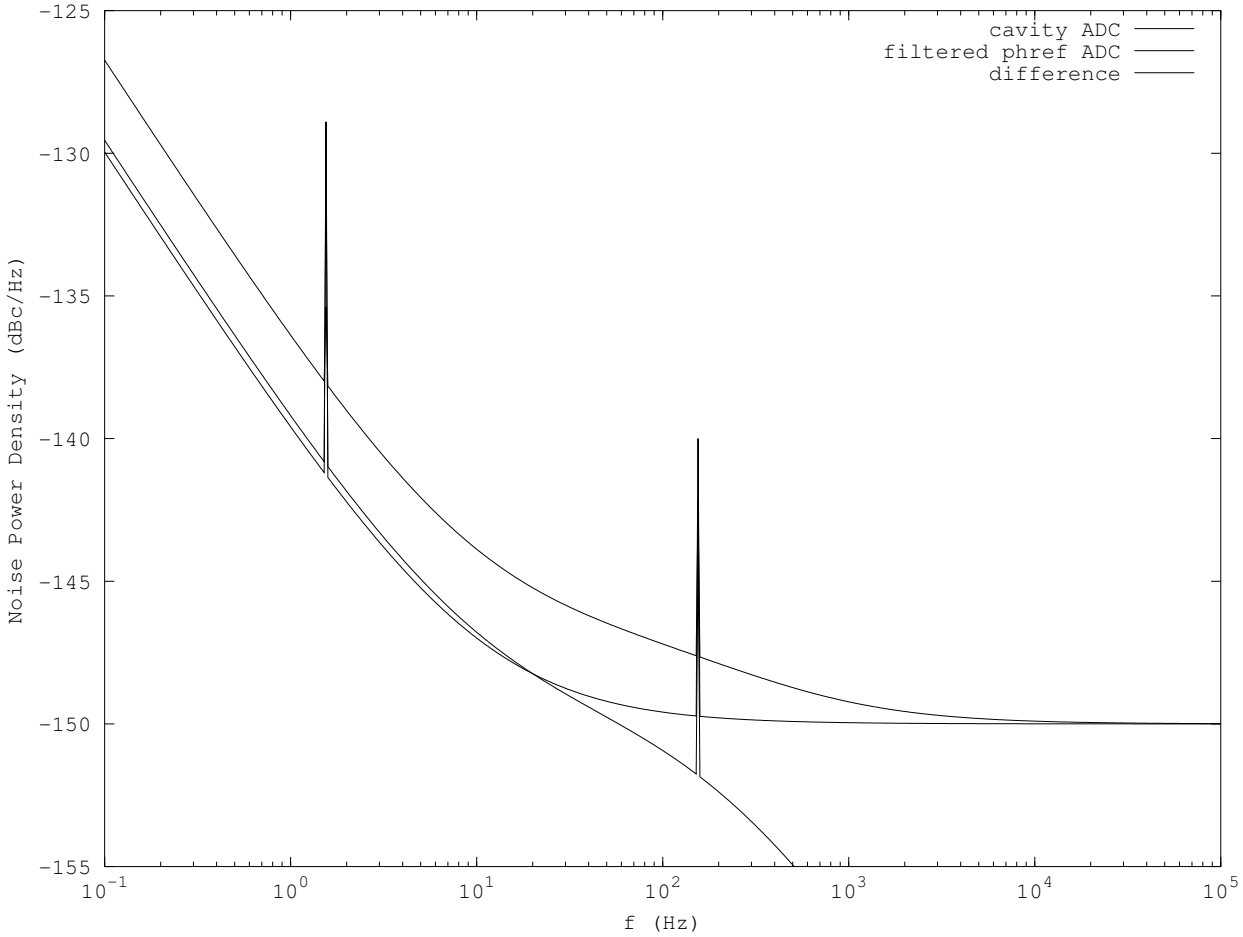

Mixer Behavior

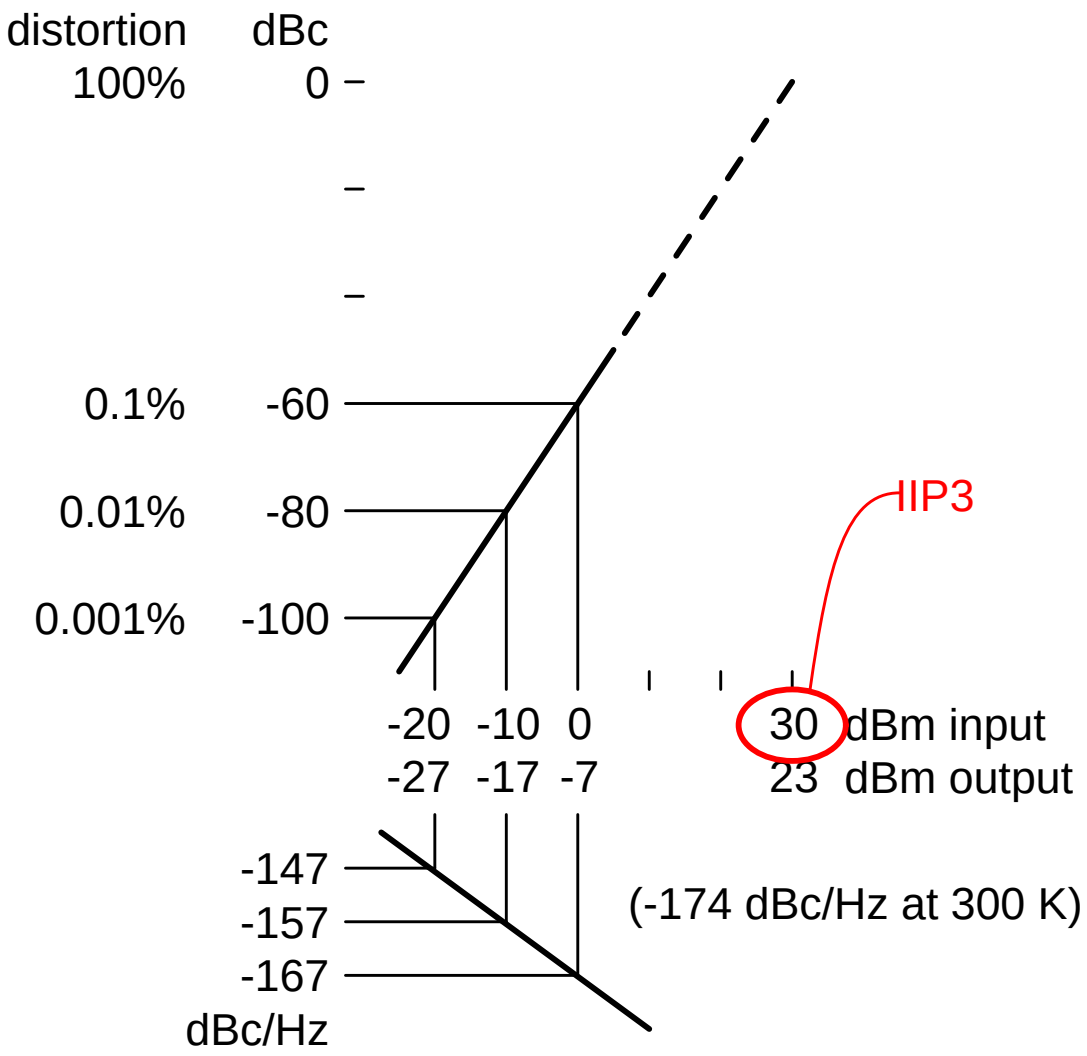

Distortion

Memory-less distortion model function

$$f(x) = x + a_3 x^3$$

Slight generalization for complex numbers (radio)

$$f(x) = x \cdot (1 + a_3 |x|^2)$$

includes AM-PM conversion term (imaginary part of a_3)

Distortion

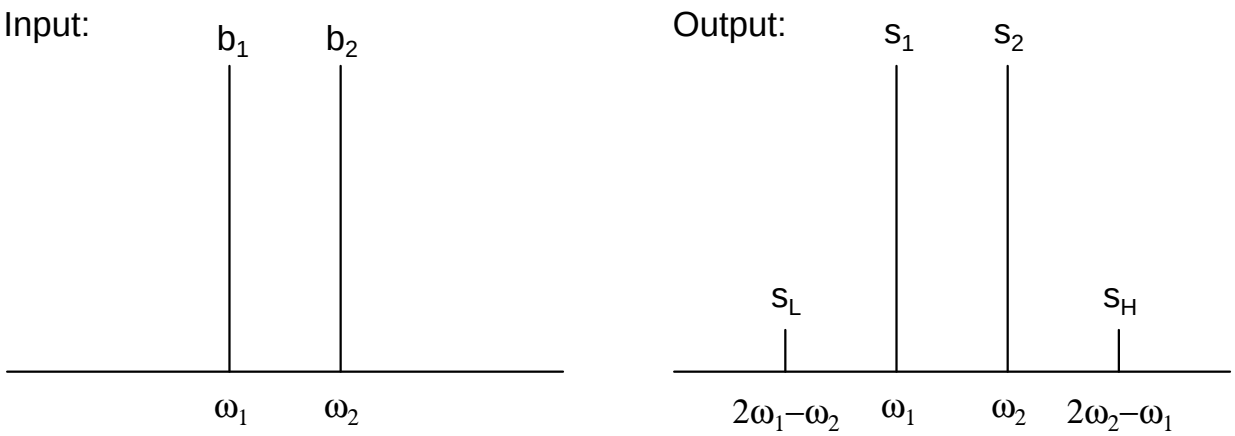

$$s_L = a_3 b_1^2 b_2^*$$

$$s_1 = b_1 \left[1 + a_3(|b_1|^2 + 2|b_2|^2)\right]$$

$$s_2 = b_2 \left[1 + a_3(|b_2|^2 + 2|b_1|^2)\right]$$

$$s_H = a_3 b_2^2 b_1^*$$

If we measure s_L, s_1, s_2, s_H then it's possible to estimate a_3.

Distortion compensation

If $y = f(x) = x \cdot (1 + a_3|x|^2)$, define

$$g(y) = y \cdot (1 - a_3|y|^2)$$

then

$$g(f(x)) = x + O(x^5)$$

Implementation - top level

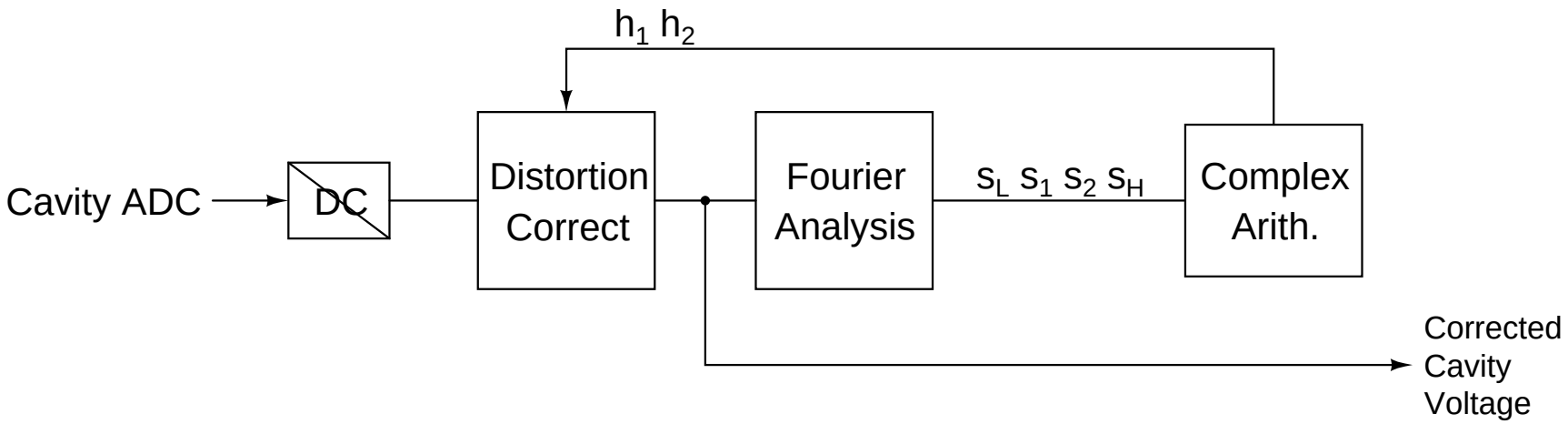

Implementation - distortion correct

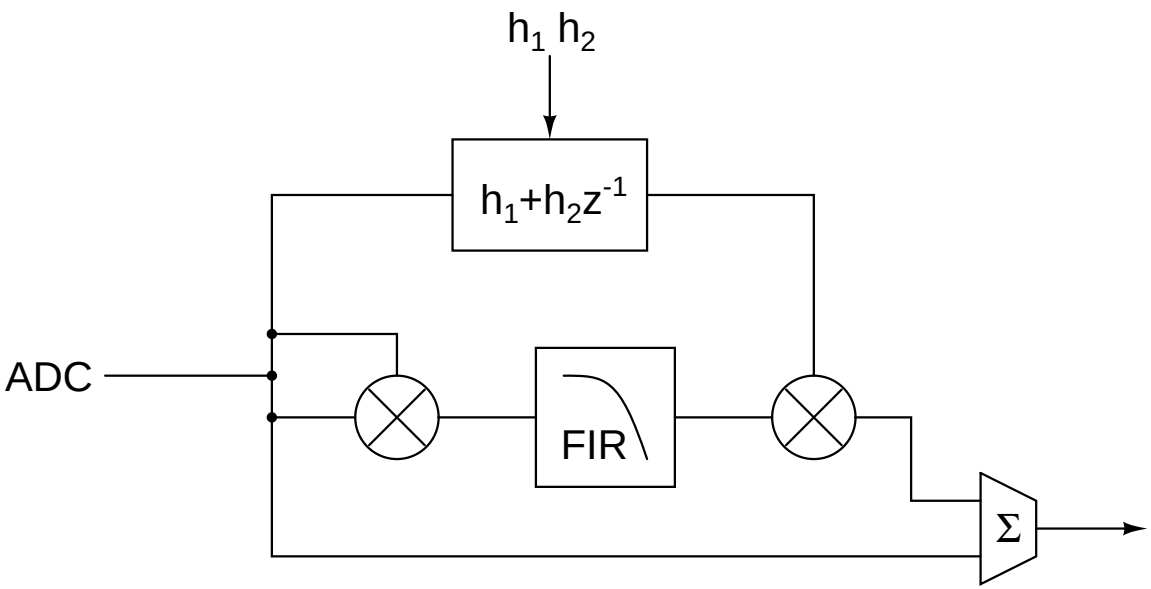

Implementation - complex arithmetic

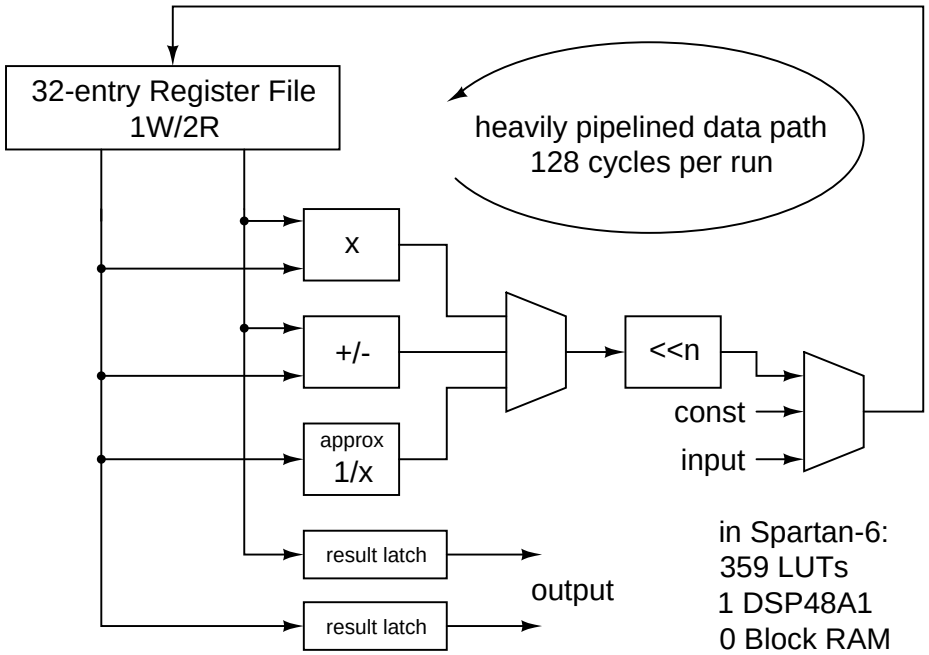

$$a_3 = a_3 + D/2 \cdot (s_L/(s_1^2 \cdot s_2^*) + s_H/(s_2^2 \cdot s_1^*))$$

$$\begin{pmatrix} h_1 \\ h_2 \end{pmatrix} = \begin{pmatrix} 1 & \cos\theta \\ 0 & \sin\theta \end{pmatrix}^{-1} \begin{pmatrix} \Re(a_3) \\ \Im(a_3) \end{pmatrix}$$

Implementation

Multiplier count

1	square
0	FIR filter to get magnitude
2	FIR filter based on a_3
1	signal multiplier
4	downconvert upper and lower IM sideband
1	complex arithmetic computer
9	total

(assumes downconversion of unknown and pilot tone are a given)

Noise Power Density

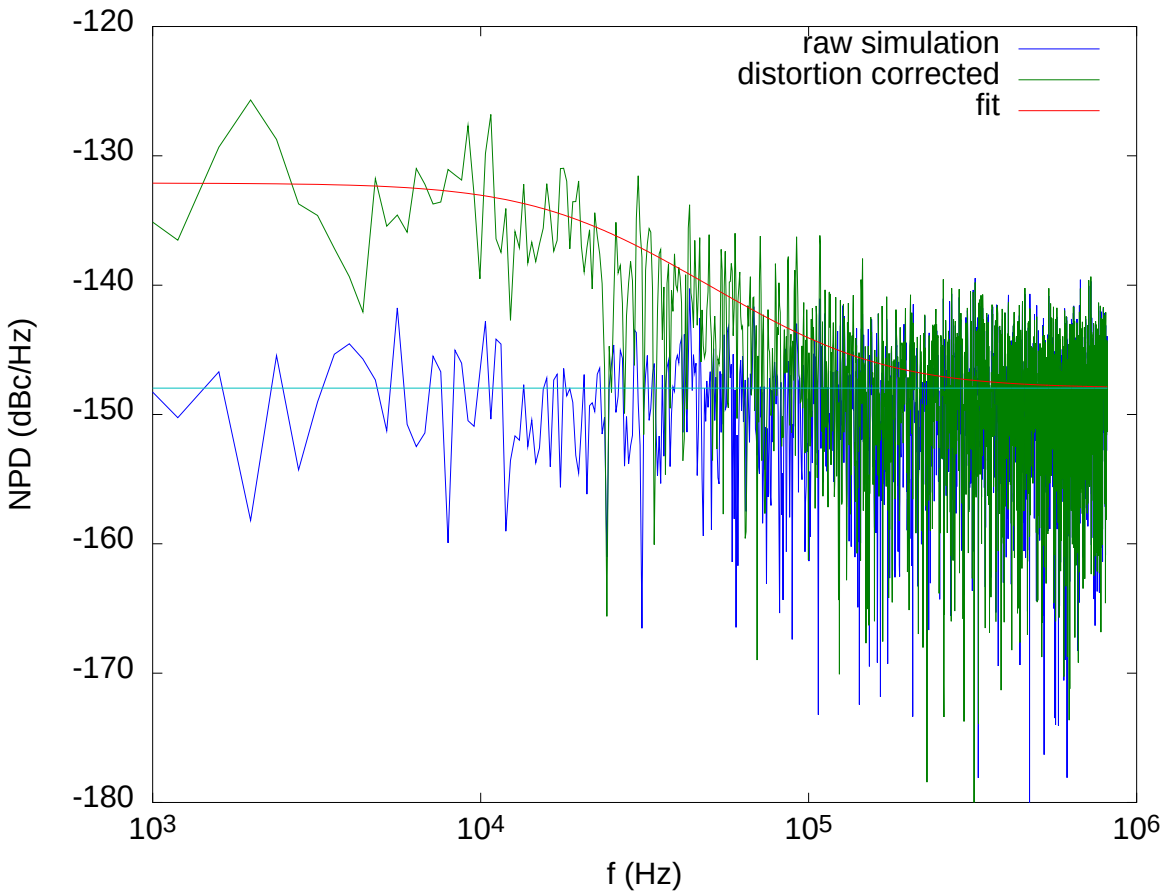

Conclusions

Apologies that this turned into only a theory talk

FPGA code is recently completed and ready for lab tests

Promising way to cheat traditional tradeoff between distortion and noise

Thank You!