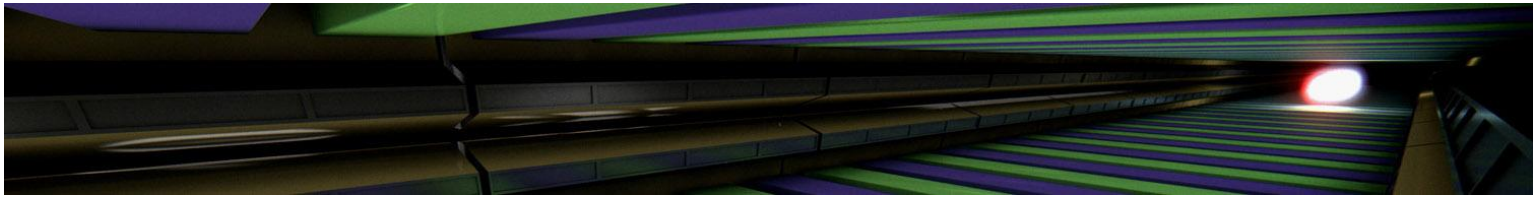

Update on XFEL LLRF system development and production

Julien Branlard,
for the LLRF team

MSK – LLRF team – MANY THANKS

- **Deutsches Elektronen-Synchrotron DESY, Hamburg, Germany**

  Julien Branlard, Gohar Ayvazyan, Valeri Ayvazyan, Mariusz Grecki, Matthias Hoffmann, Tomasz Jeżyński, Frank Ludwig, Uros Mavrič, Sven Pfeiffer, Holger Schlarb, Christian Schmidt, Henning Weddig, Bin Yang

- **Institute of Electronic Systems, Warsaw University of Technology, Poland**

  Paweł Barmuta, Samer Bou Habib, Łukasz Butkowski, Krzysztof Czuba, Maciej Grzegrzółka, Ewa Janas, Jan Piekarski, Igor Rutkowski, Dominik Sikora, Łukasz Zembala, Mateusz Żukociński

- **Dept of Microelectronics and Computer Science, Łódź University of Tech., Poland**

  Wojciech Cichalewski, Wojciech Jałmużna, Dariusz Makowski, Aleksander Mielczarek, Andrzej Napieralski, Piotr Perek, Adam Piotrowski, Tomasz Poźniak, Konrad Przygoda

- **National Centre for Nuclear Research, Świerk, Poland**

  Grzegorz Bołtruczyk, Stefan Korolczuk, Maciej Kudła, Jarosław Szewiński

- **Institute of Nuclear Physics, Polish Academy of Sciences, Kraków, Poland**

  Krzysztof Oliwa, Wojciech Wierba

OVERVIEW

- **XFEL and LLRF**
  - XFEL accelerator overview
  - LLRF system overview in 1 (big) slide

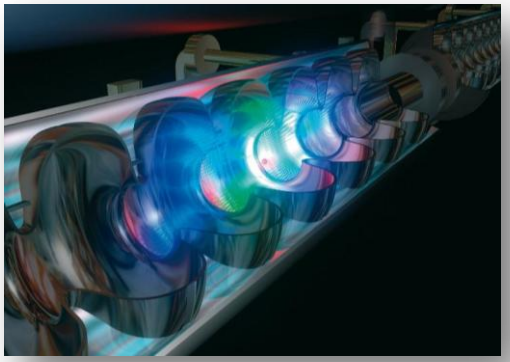

- **A few highlights**
  - Hardware
  - Operation

- **Schedule and status**
  - XFEL schedule
  - LLRF production
  - Outlook

INTRODUCTION

XFEL accelerator overview

LLRF system overview

The European X-ray Free-Electron Laser (XFEL)

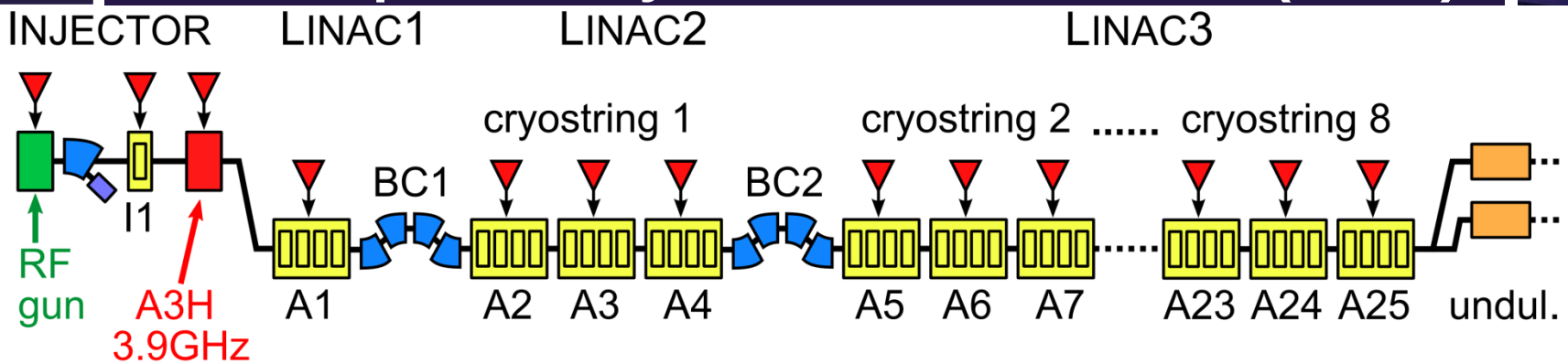

- 808 superconducting 1.3 GHz TESLA RF cavities
- 101 cryomodules (8 cavities)
- 25 RF stations (4 cryomodules)
- **1 LLRF system / RF station (i.e. per klystron)**

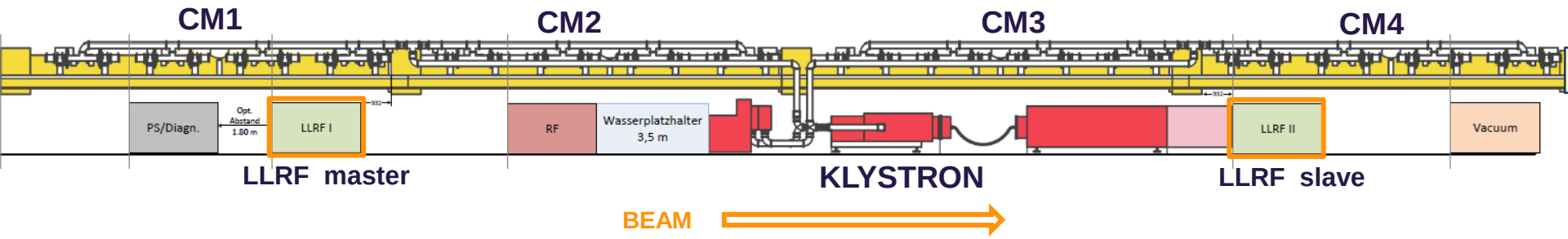

LLRF architecture for an RF station

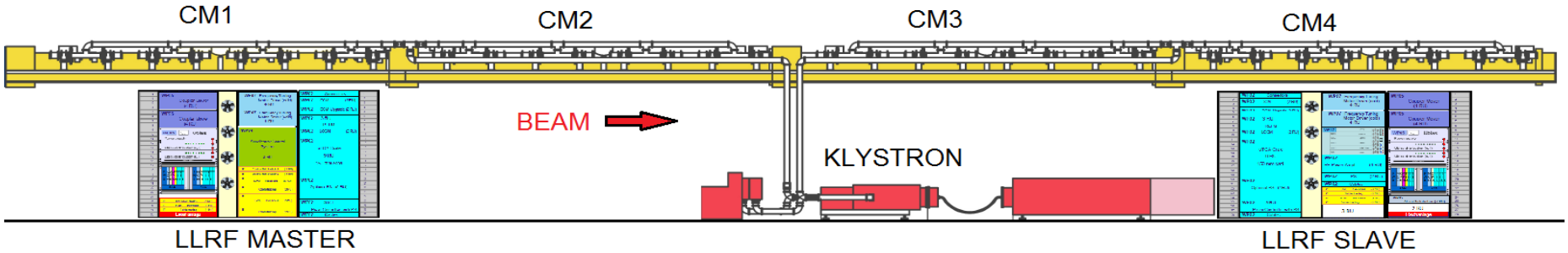

RF station: semi-distributed LLRF system

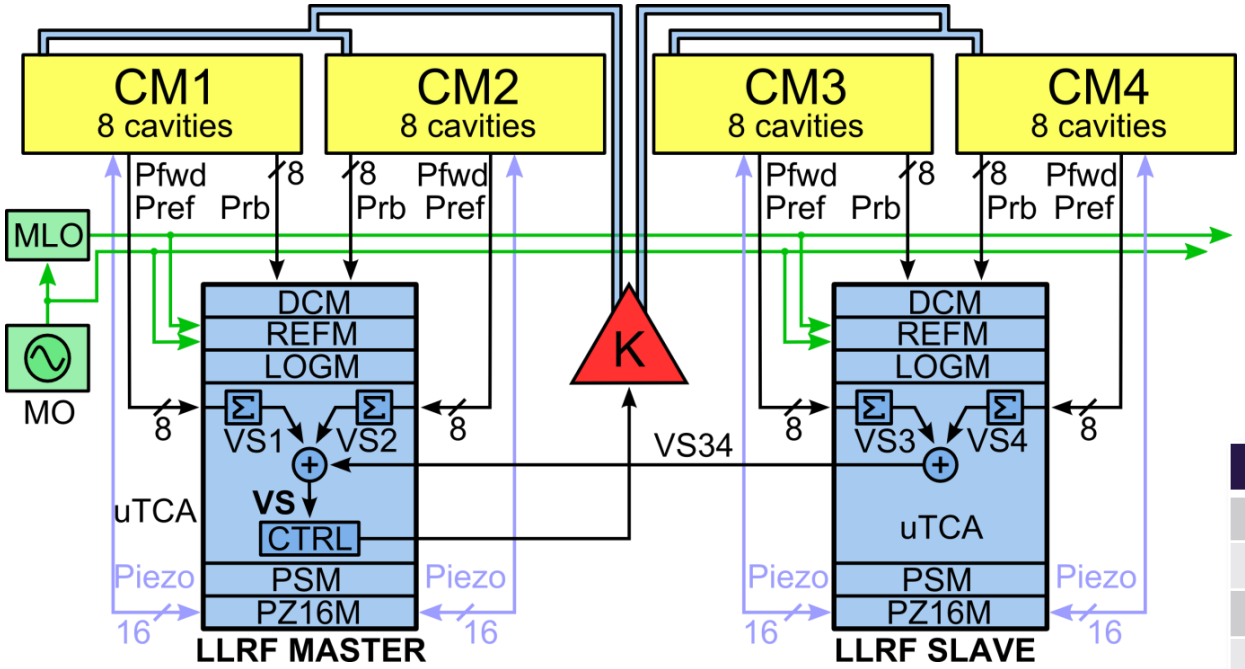

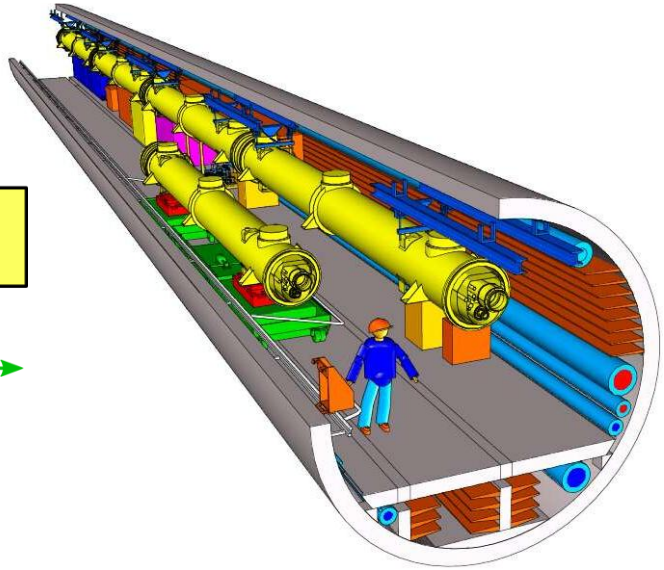

Section	Rack space	Redundancy
Gun, I1, 3H1	16U	Full
Linac 1	28U	Full
Linac 2	28U	No
Linac 3	28U	No

The MTCA.4 LLRF system

- AMC: Advanced Mezzanine Card
- RTM: Rear Transition Module
- 12 slots, hot swap
- Redundant power supply

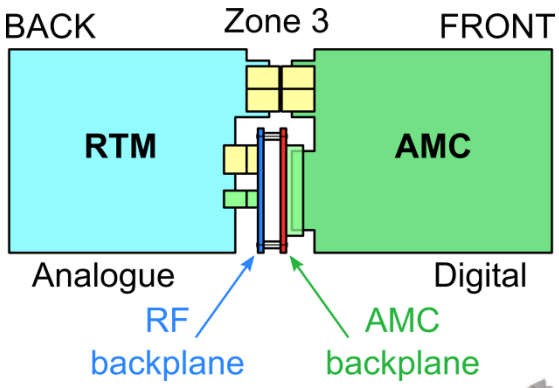

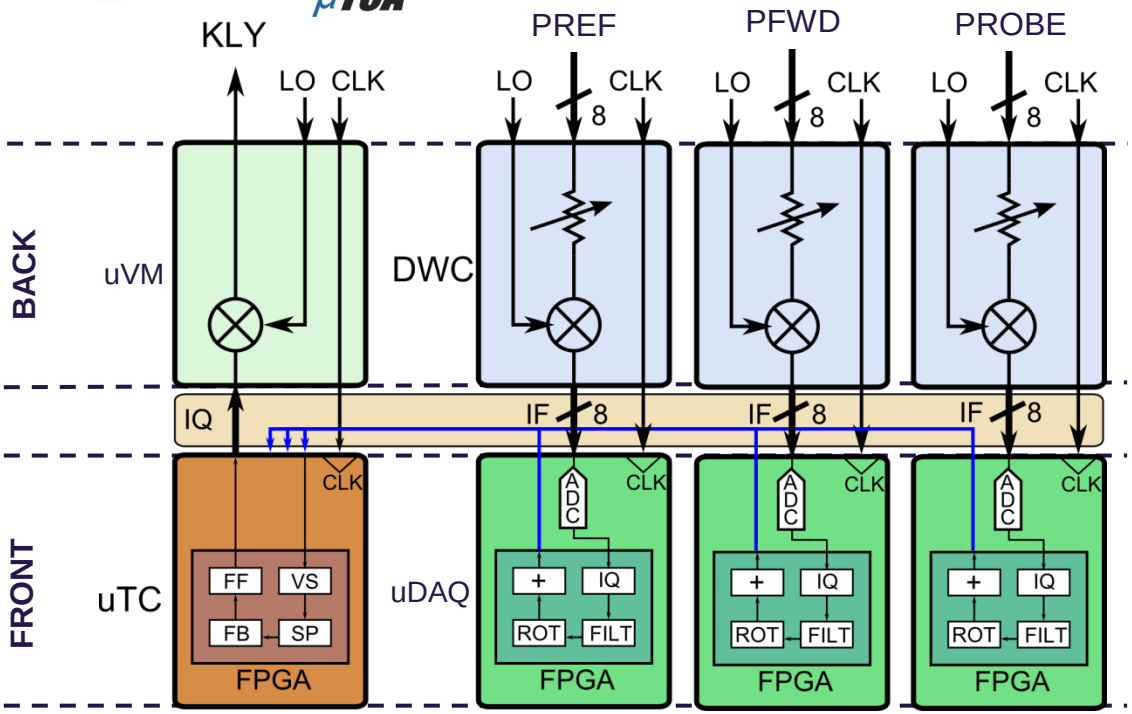

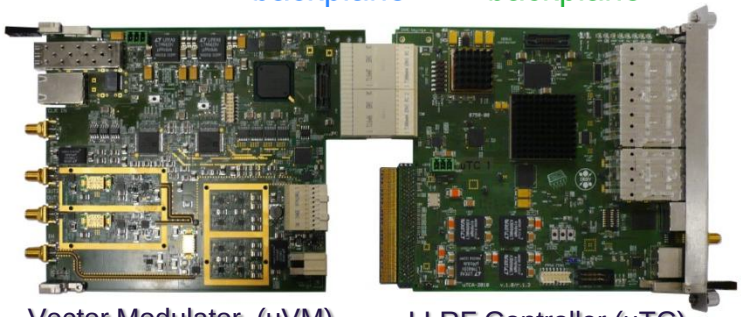

Vector Modulator (uVM) LLRF Controller (uTC)

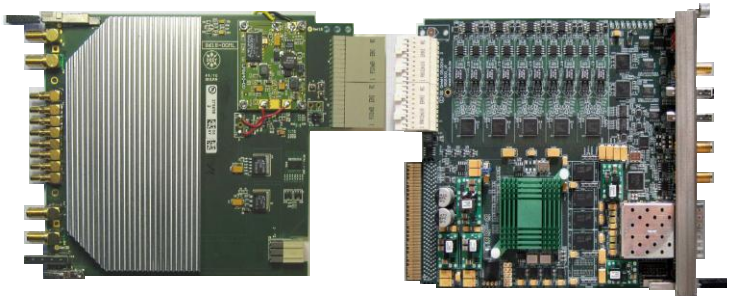

Down Converter (uDWC) Digitizer (uADC)

The MTCA.4 LLRF system

- AMC: Advanced Mezzanine Card
- RTM: Rear Transition Module
- 12 slots, hot swap
- Redundant power supply

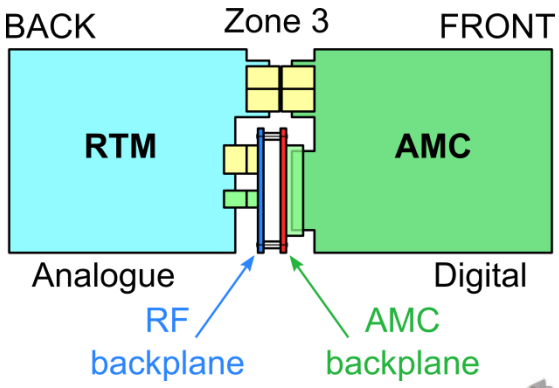

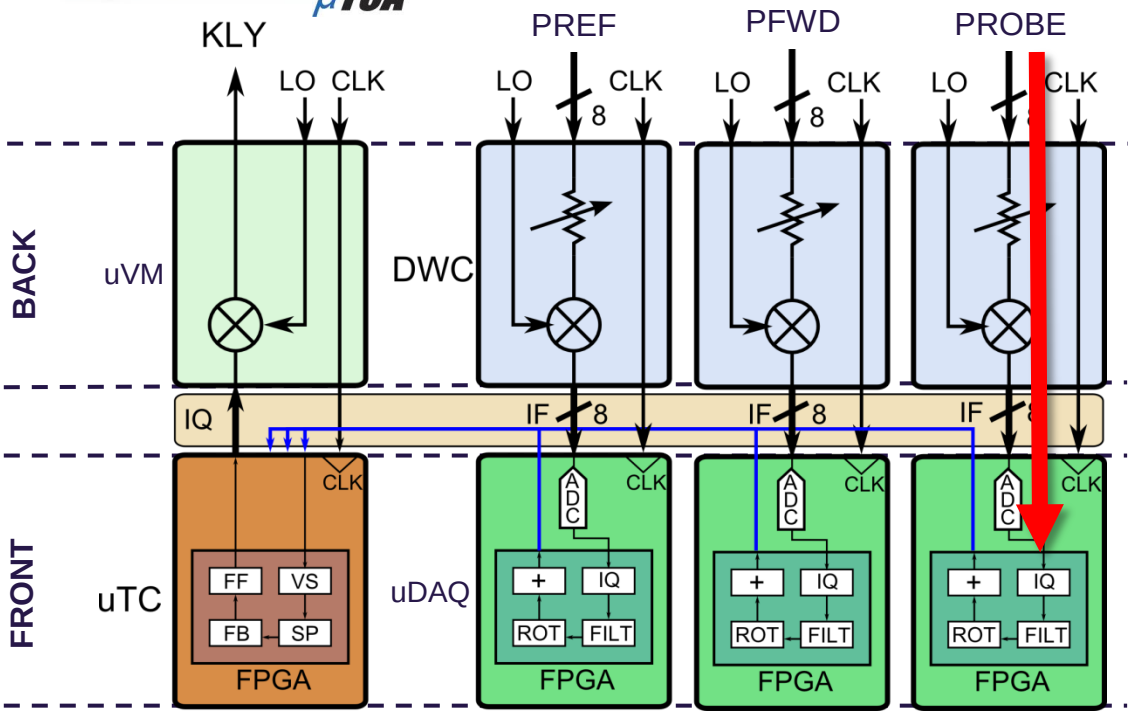

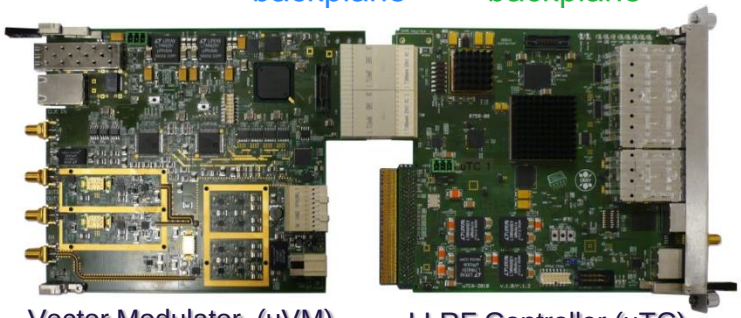

Vector Modulator (uVM) LLRF Controller (uTC)

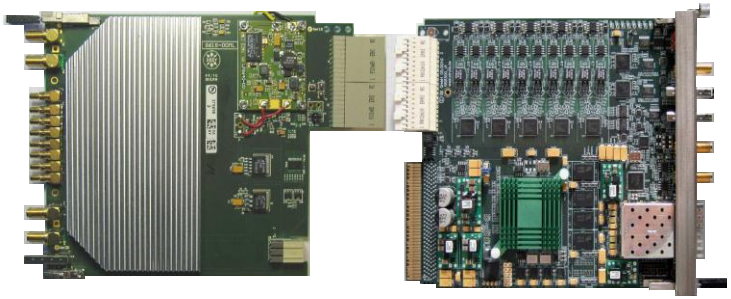

Down Converter (uDWC) Digitizer (uADC)

The MTCA.4 LLRF system

- AMC: Advanced Mezzanine Card
- RTM: Rear Transition Module
- 12 slots, hot swap
- Redundant power supply

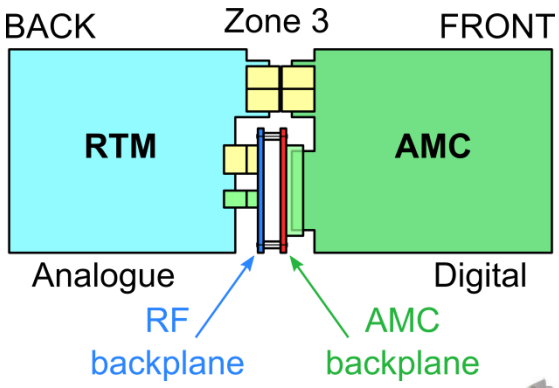

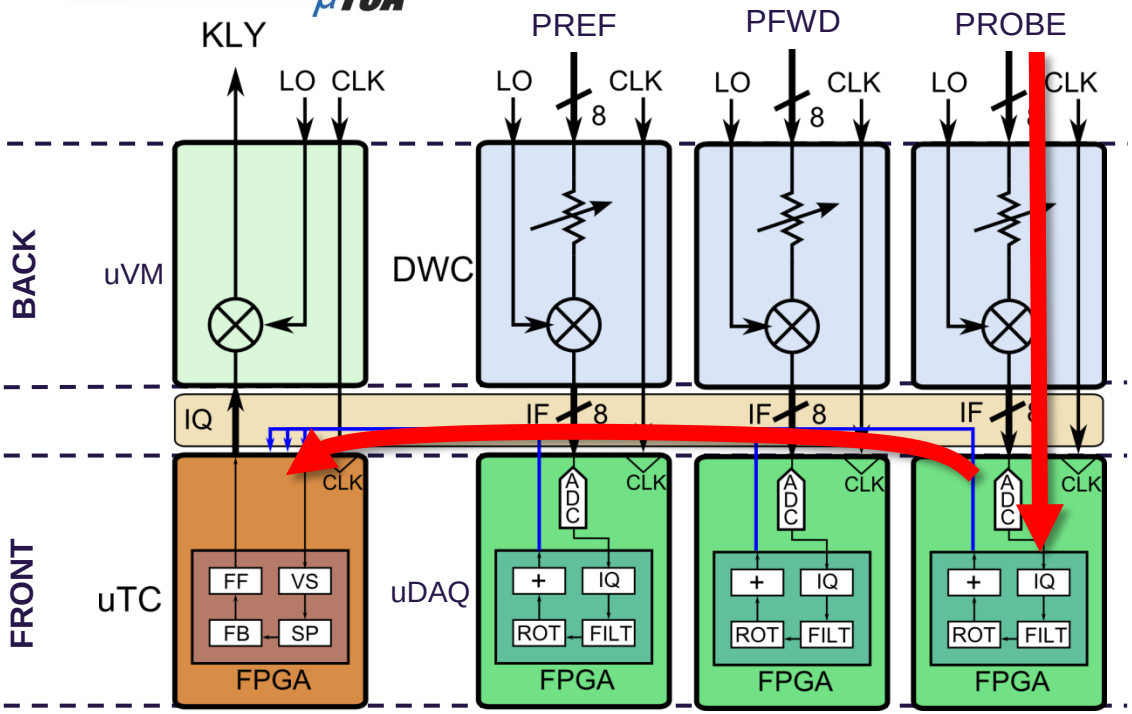

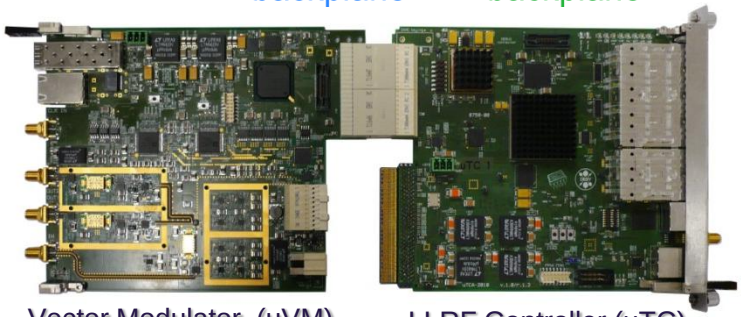

Vector Modulator (uVM) LLRF Controller (uTC)

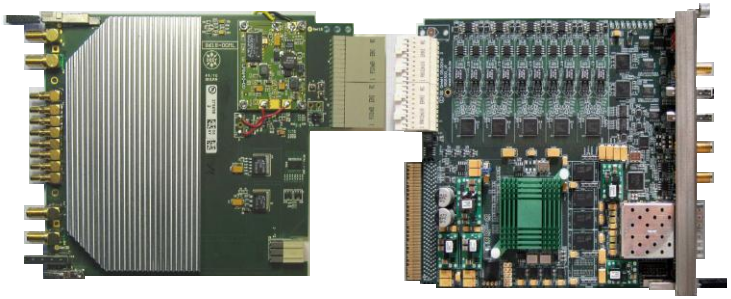

Down Converter (uDWC) Digitizer (uADC)

The MTCA.4 LLRF system

- AMC: Advanced Mezzanine Card
- RTM: Rear Transition Module
- 12 slots, hot swap
- Redundant power supply

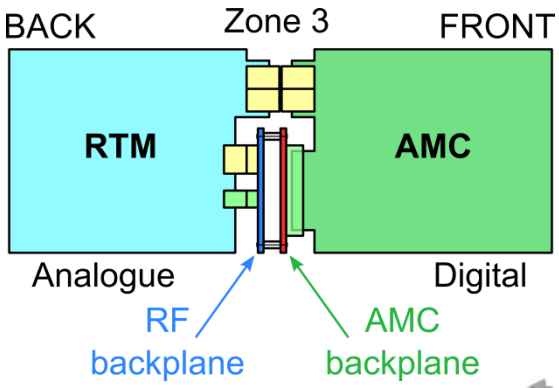

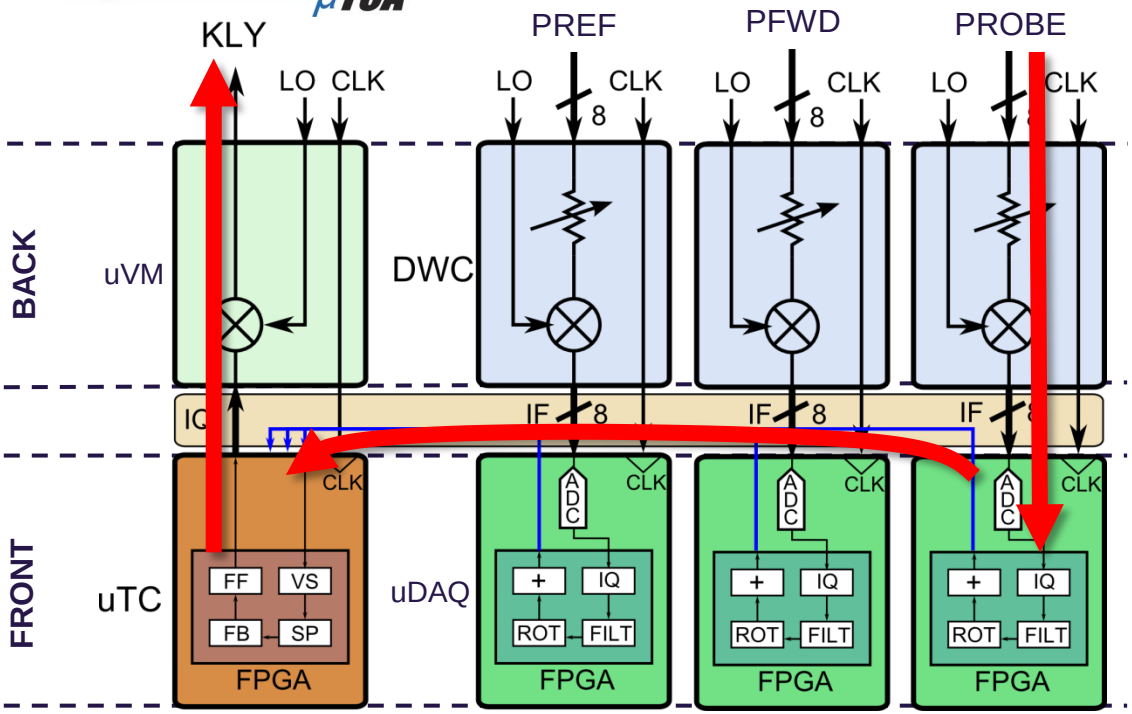

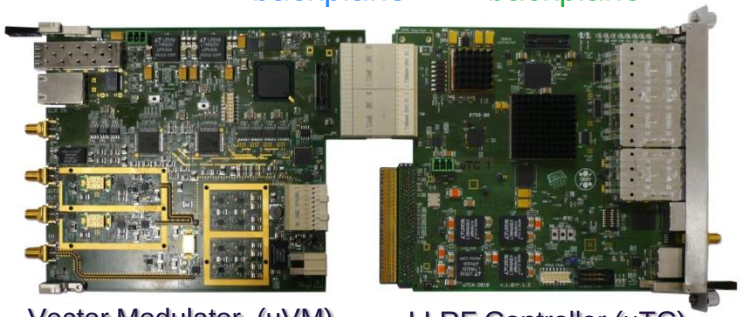

Vector Modulator (uVM) LLRF Controller (uTC)

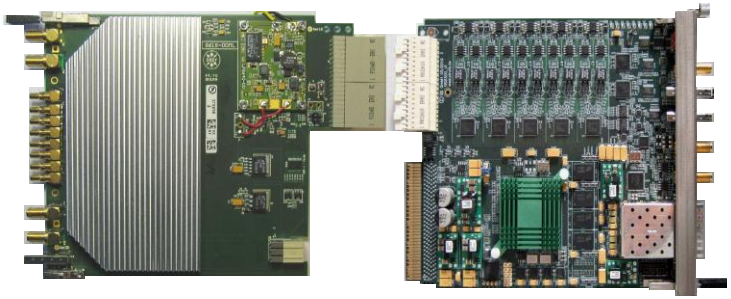

Down Converter (uDWC) Digitizer (uADC)

Overall LLRF System Description

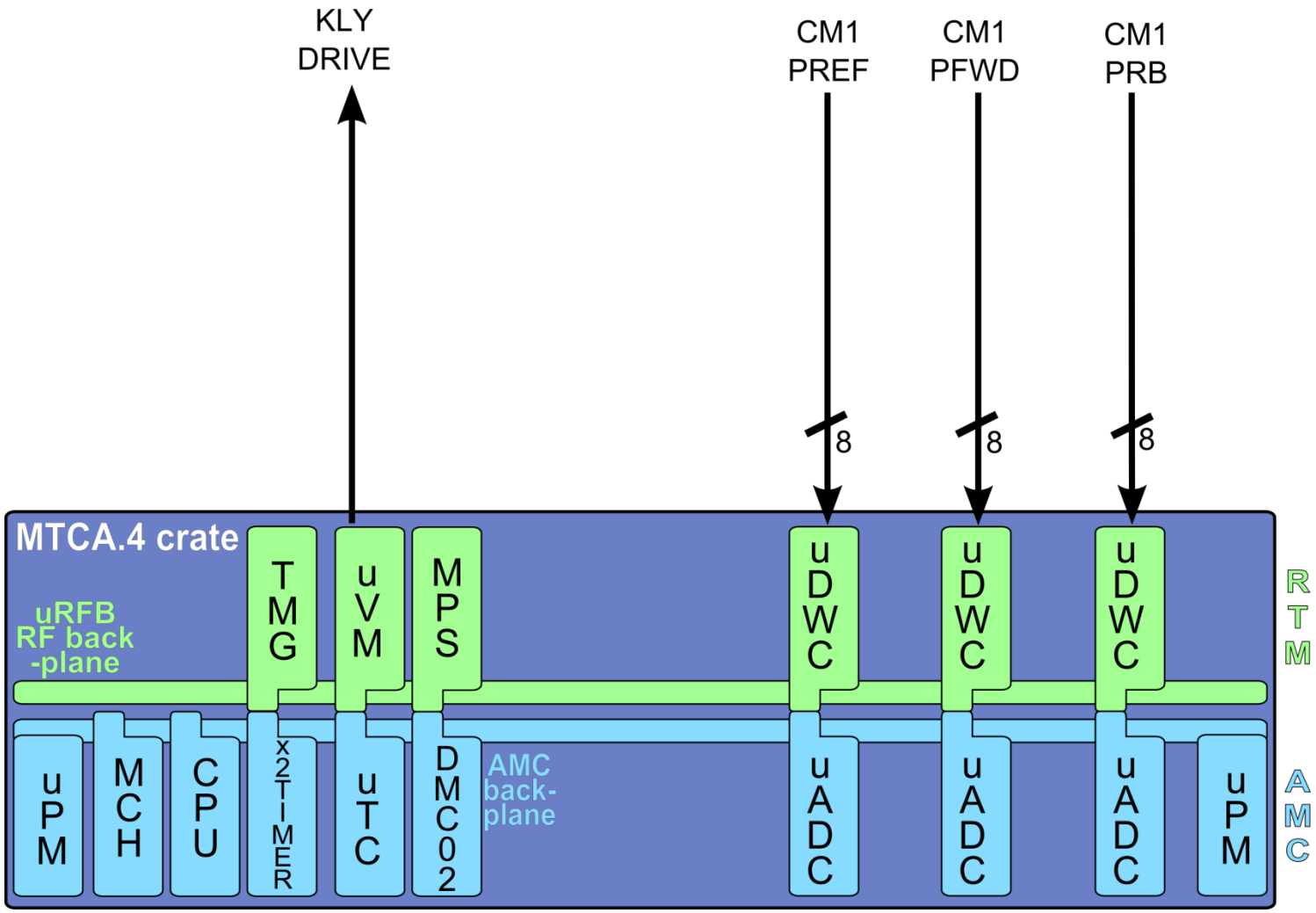

Overall LLRF System Description

REFM

RF Reference Module

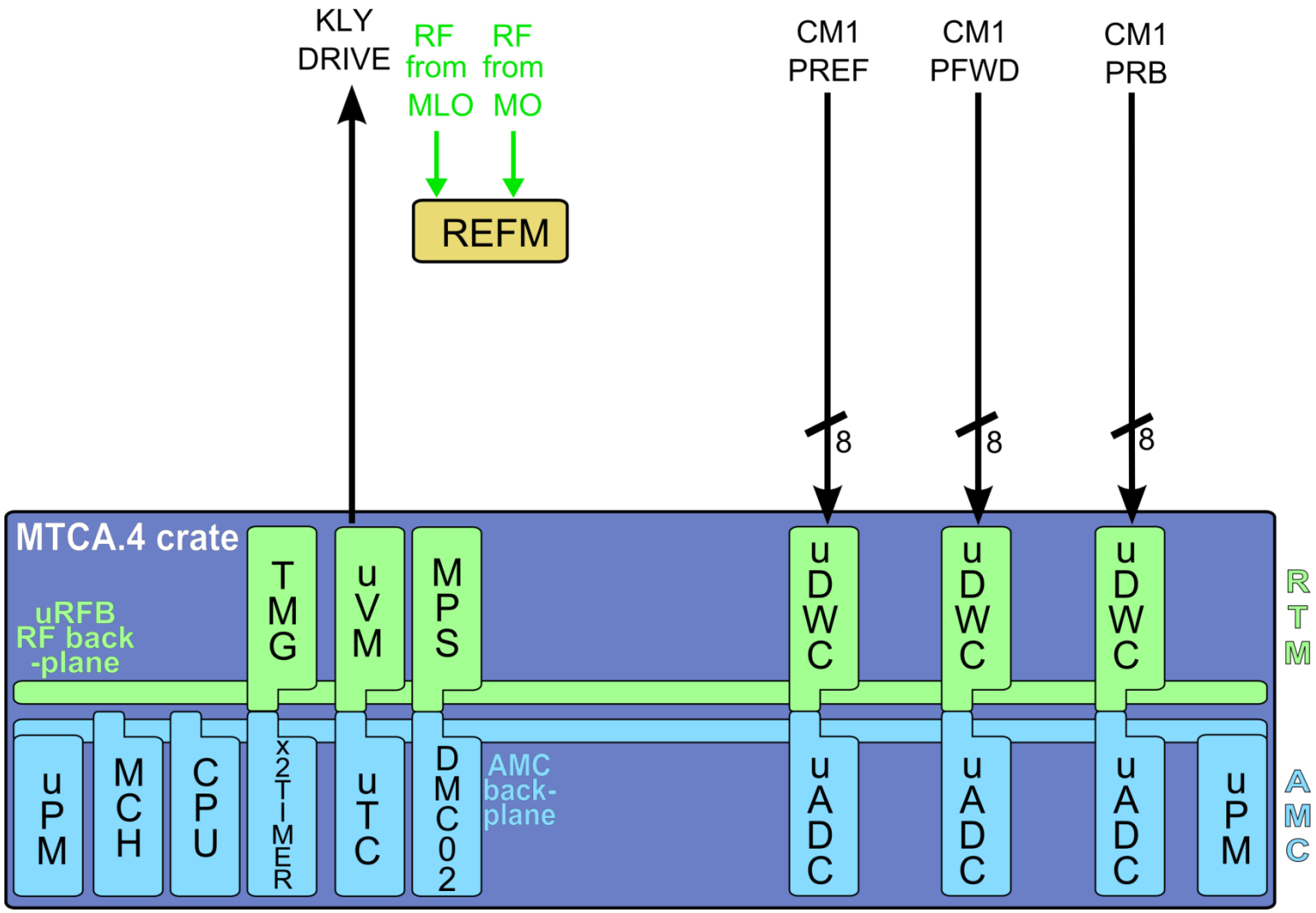

Overall LLRF System Description

REFM
RF Reference Module

DCM
Drift Compensation Module

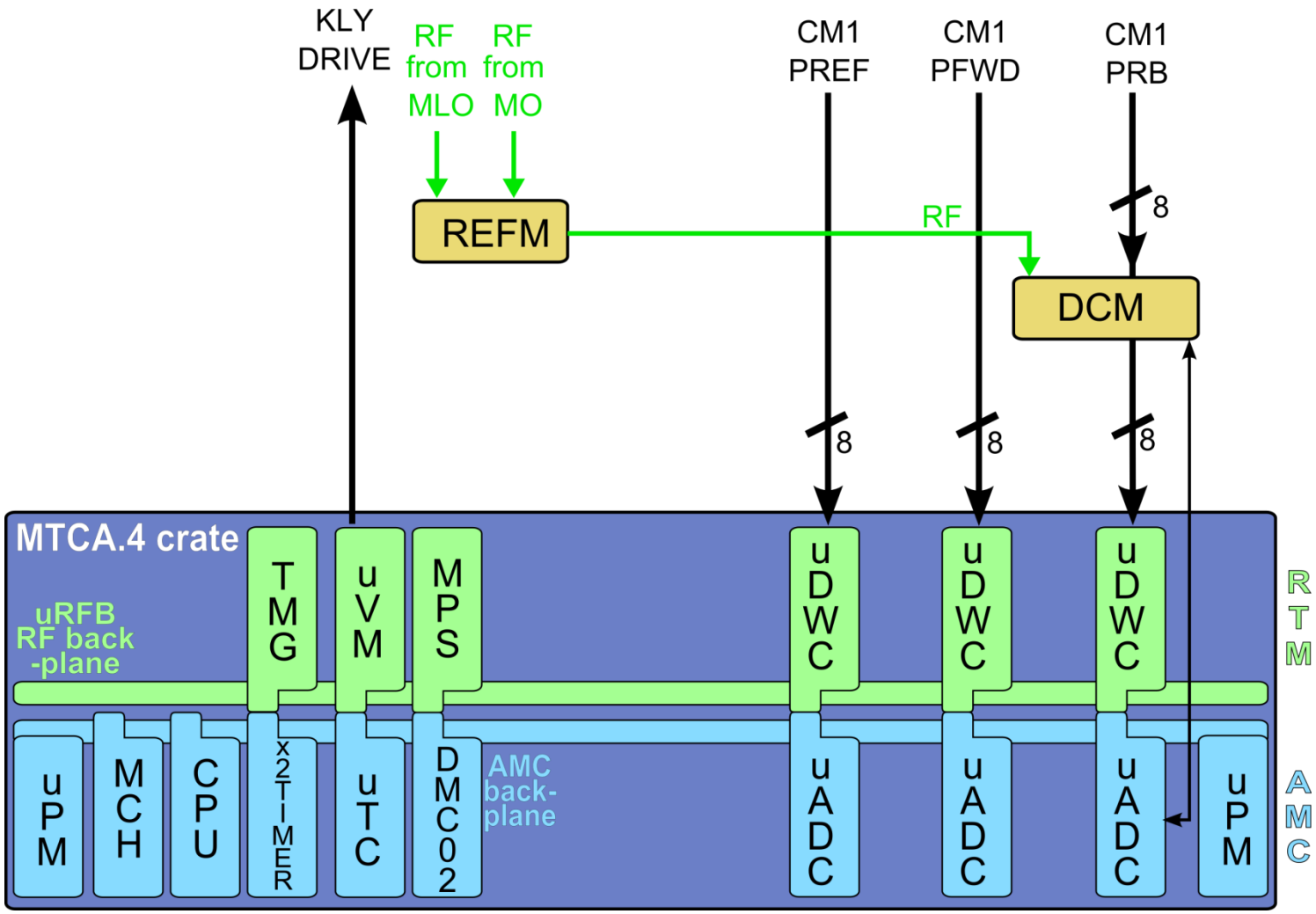

Overall LLRF System Description

REFM
RF Reference Module

DCM
Drift Compensation Module

LOGM
Local Oscillator Generation Module

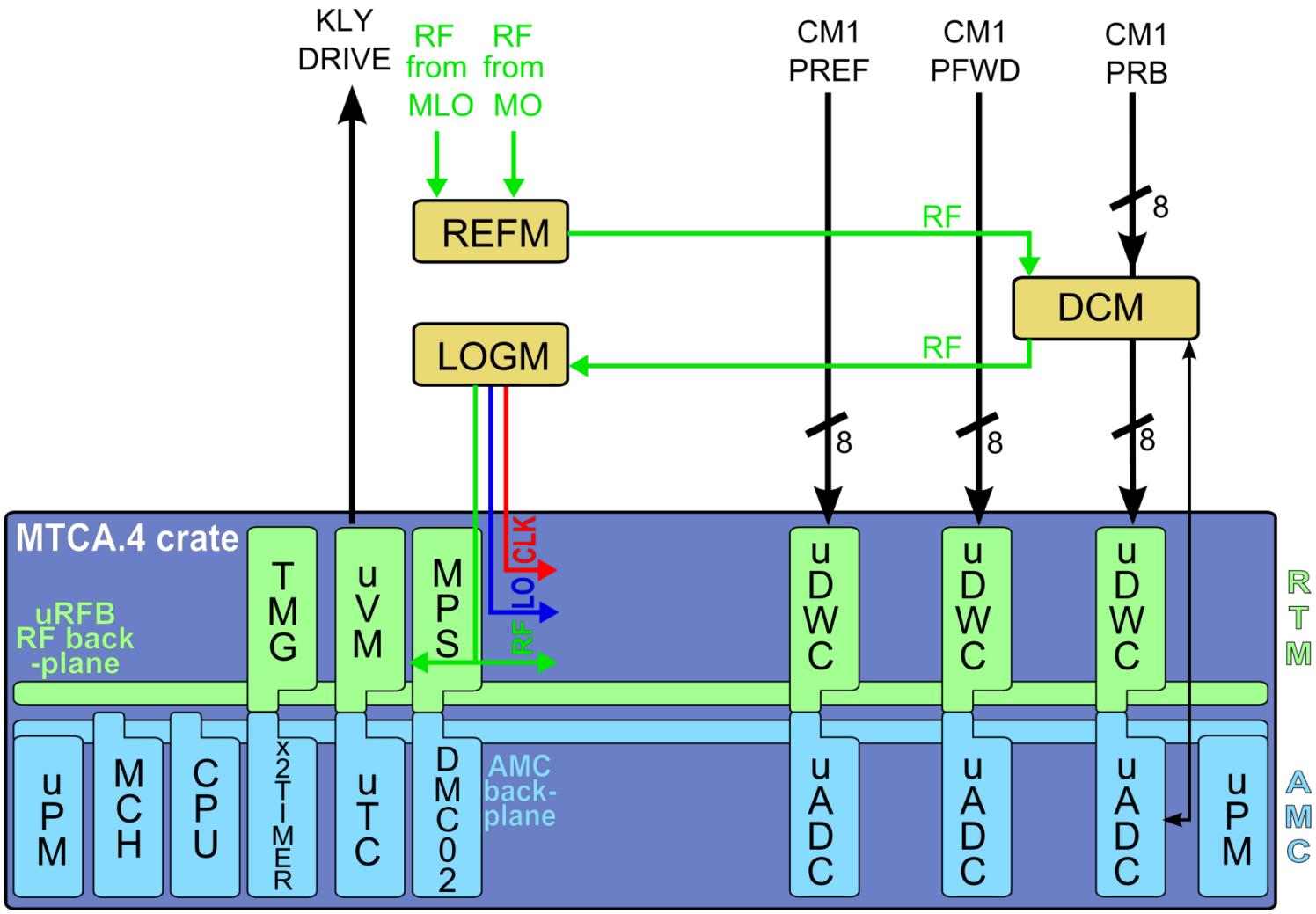

Overall LLRF System Description

REFM
RF Reference Module

DCM
Drift Compensation Module

LOGM
Local Oscillator Generation Module

PZ16M
Piezo Driver Module

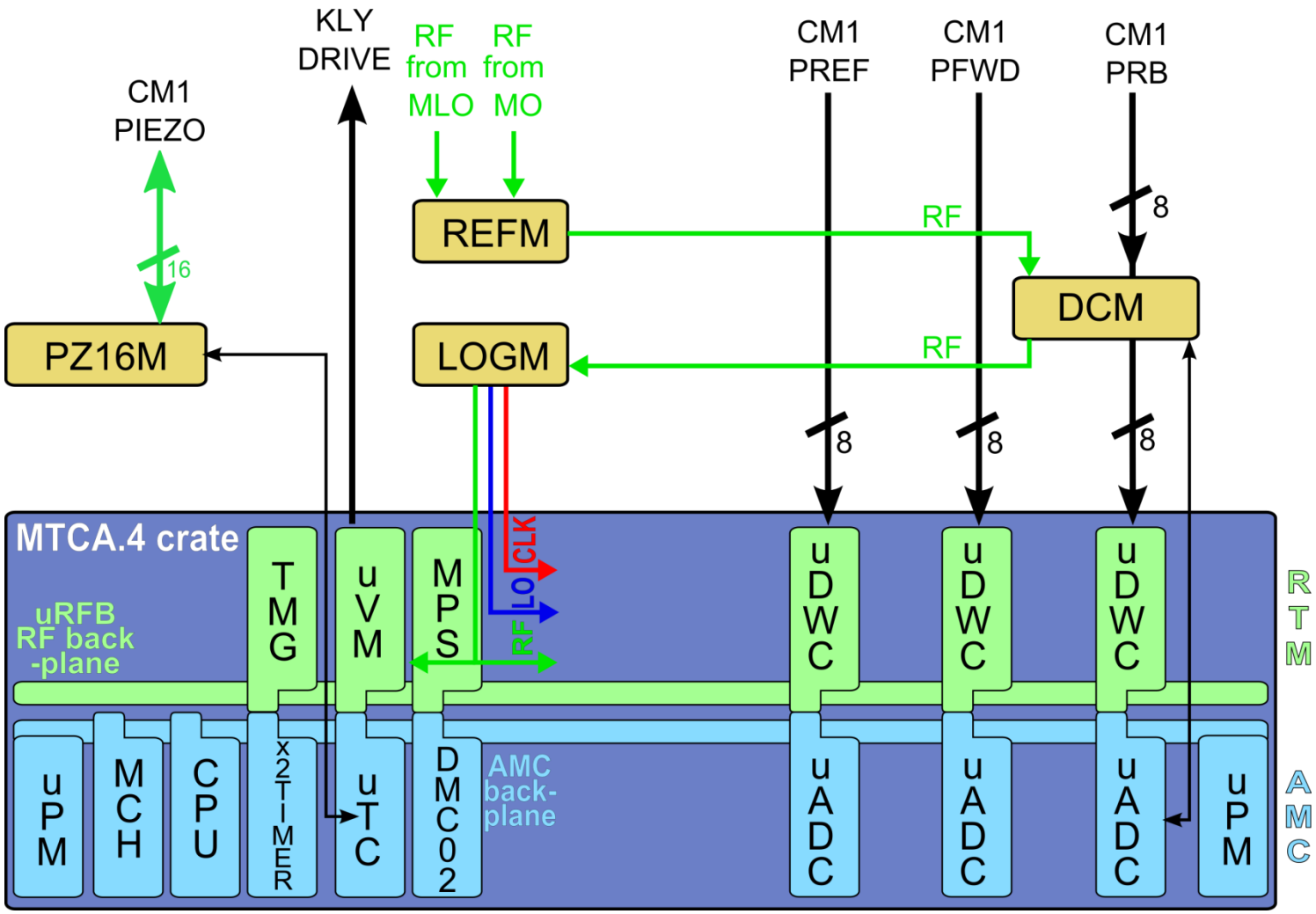

Overall LLRF System Description

REFM
RF Reference Module

DCM
Drift Compensation Module

LOGM
Local Oscillator Generation Module

PZ16M
Piezo Driver Module

PSM
Power Supply Module

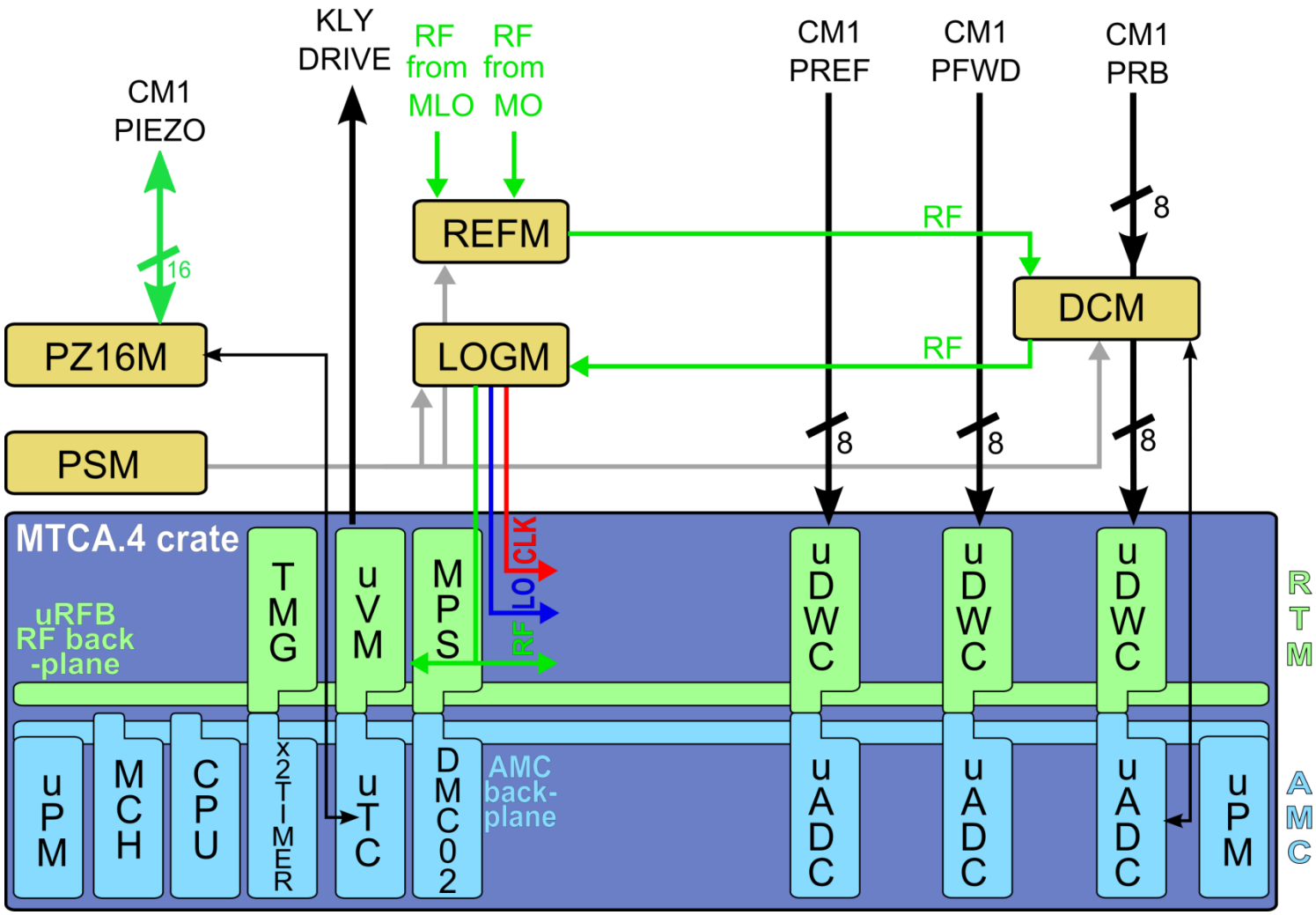

Overall LLRF System Description

REFM
RF Reference Module

DCM
Drift Compensation Module

LOGM
Local Oscillator Generation Module

PZ16M
Piezo Driver Module

PSM
Power Supply Module

CPIM
Coupler Processing interlock Module

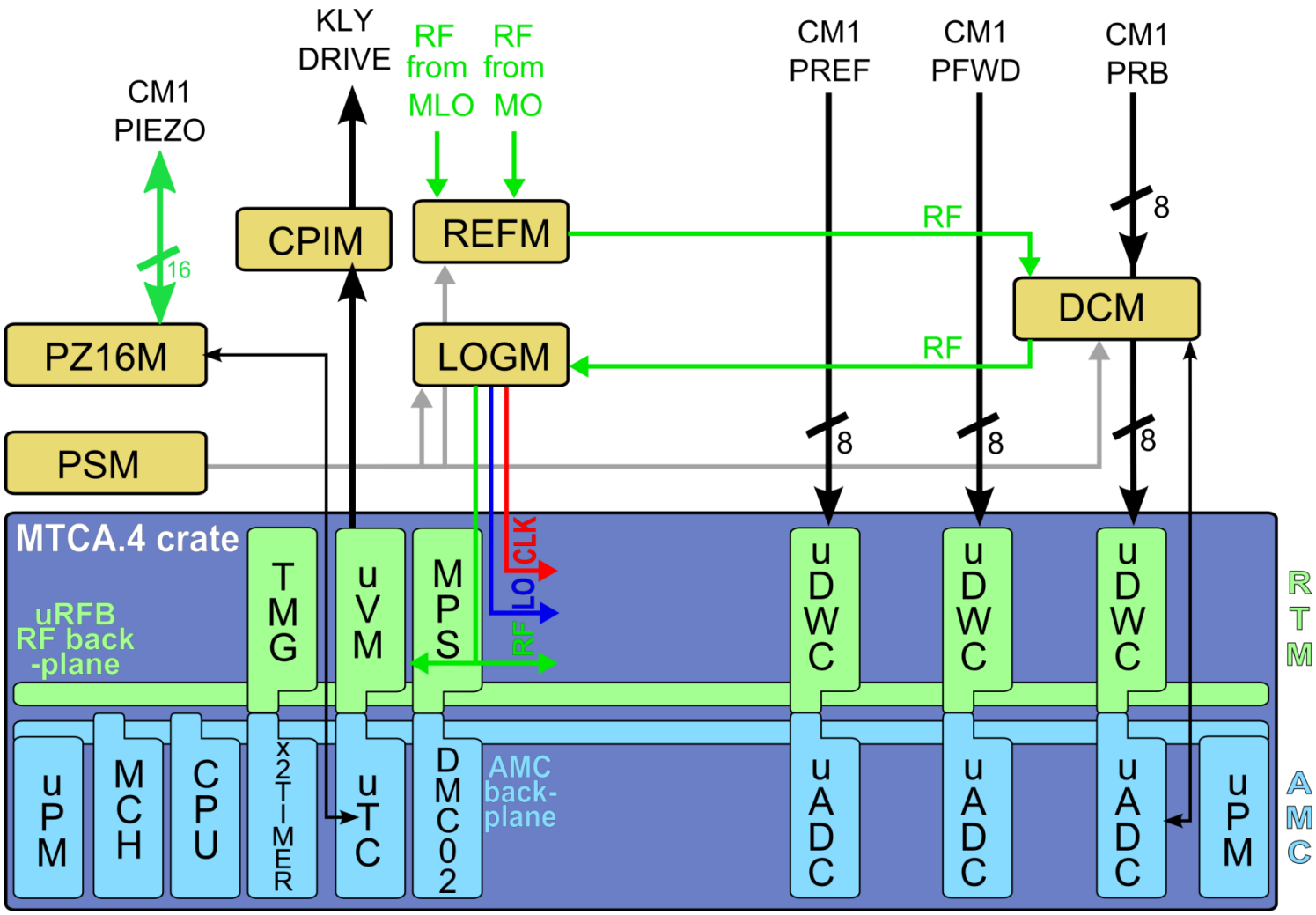

Overall LLRF System Description

REFM
RF Reference Module

DCM
Drift Compensation Module

LOGM
Local Oscillator Generation Module

PZ16M
Piezo Driver Module

PSM
Power Supply Module

CPIM
Coupler Processing interlock Module

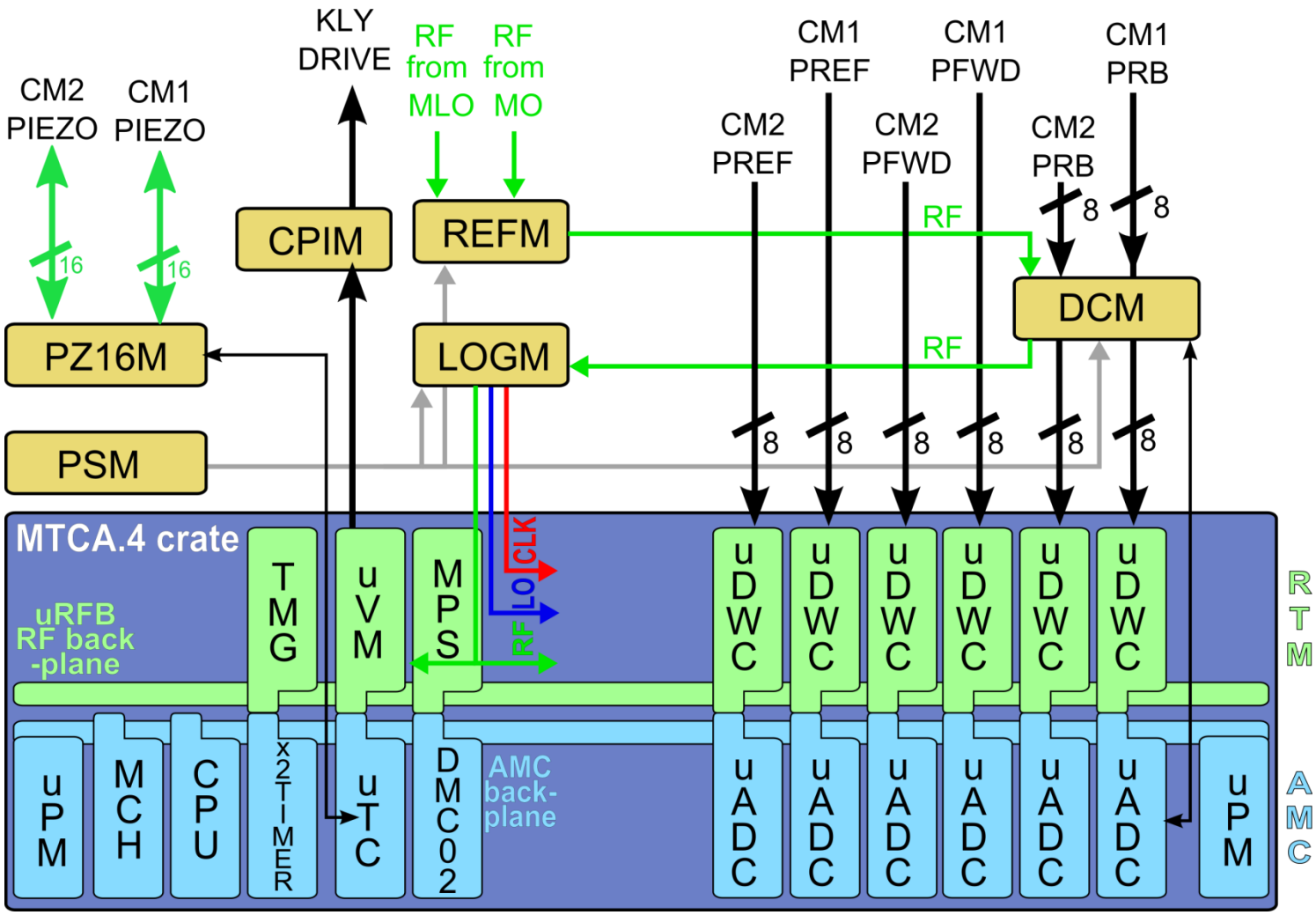

Overall LLRF System Description

REFM
RF Reference Module

DCM
Drift Compensation Module

LOGM
Local Oscillator Generation Module

PZ16M
Piezo Driver Module

PSM
Power Supply Module

CPIM
Coupler Processing interlock Module

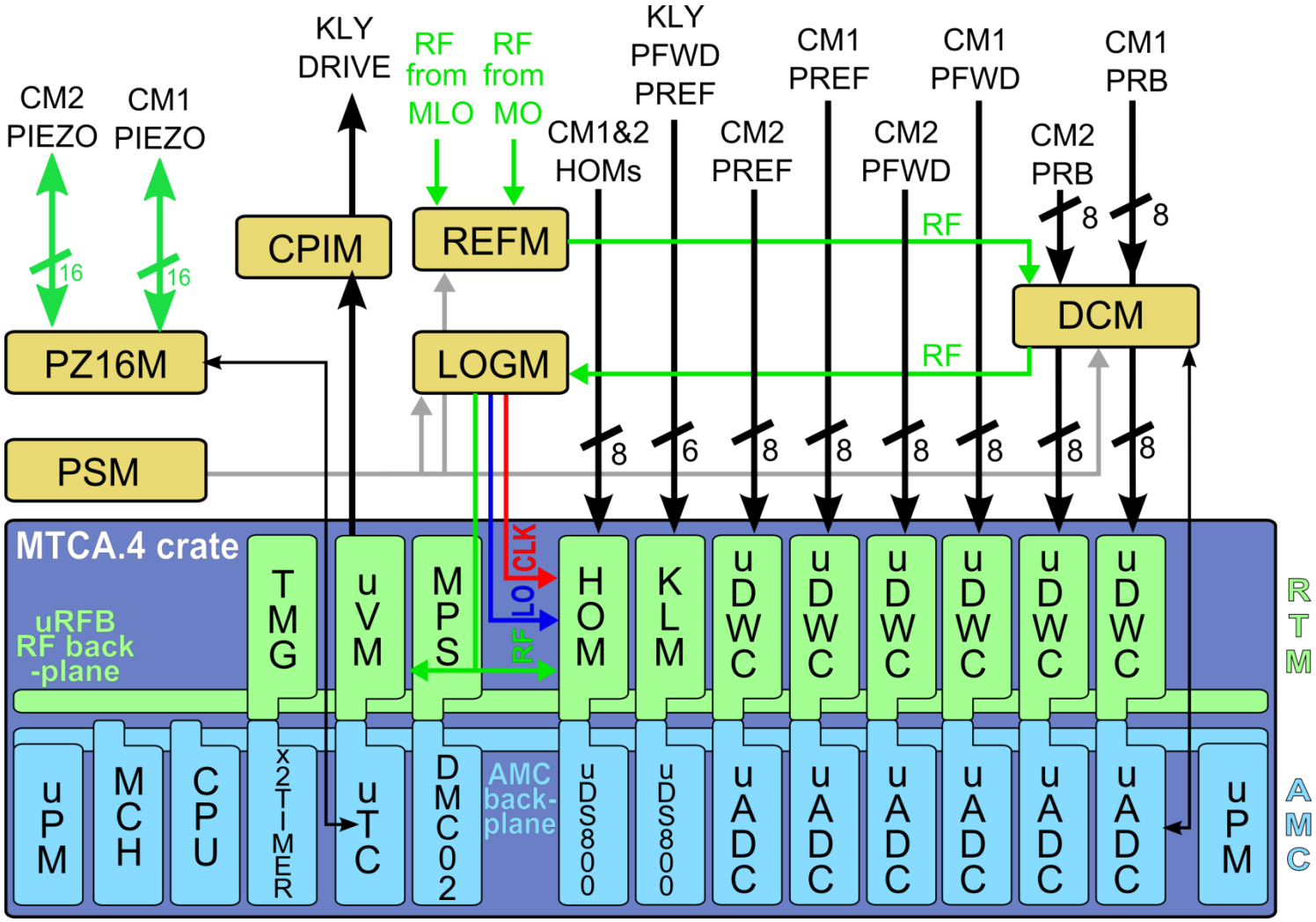

Overall LLRF System Description

REFM
RF Reference Module

DCM
Drift Compensation Module

LOGM
Local Oscillator Generation Module

PZ16M
Piezo Driver Module

PSM
Power Supply Module

CPIM
Coupler Processing interlock Module

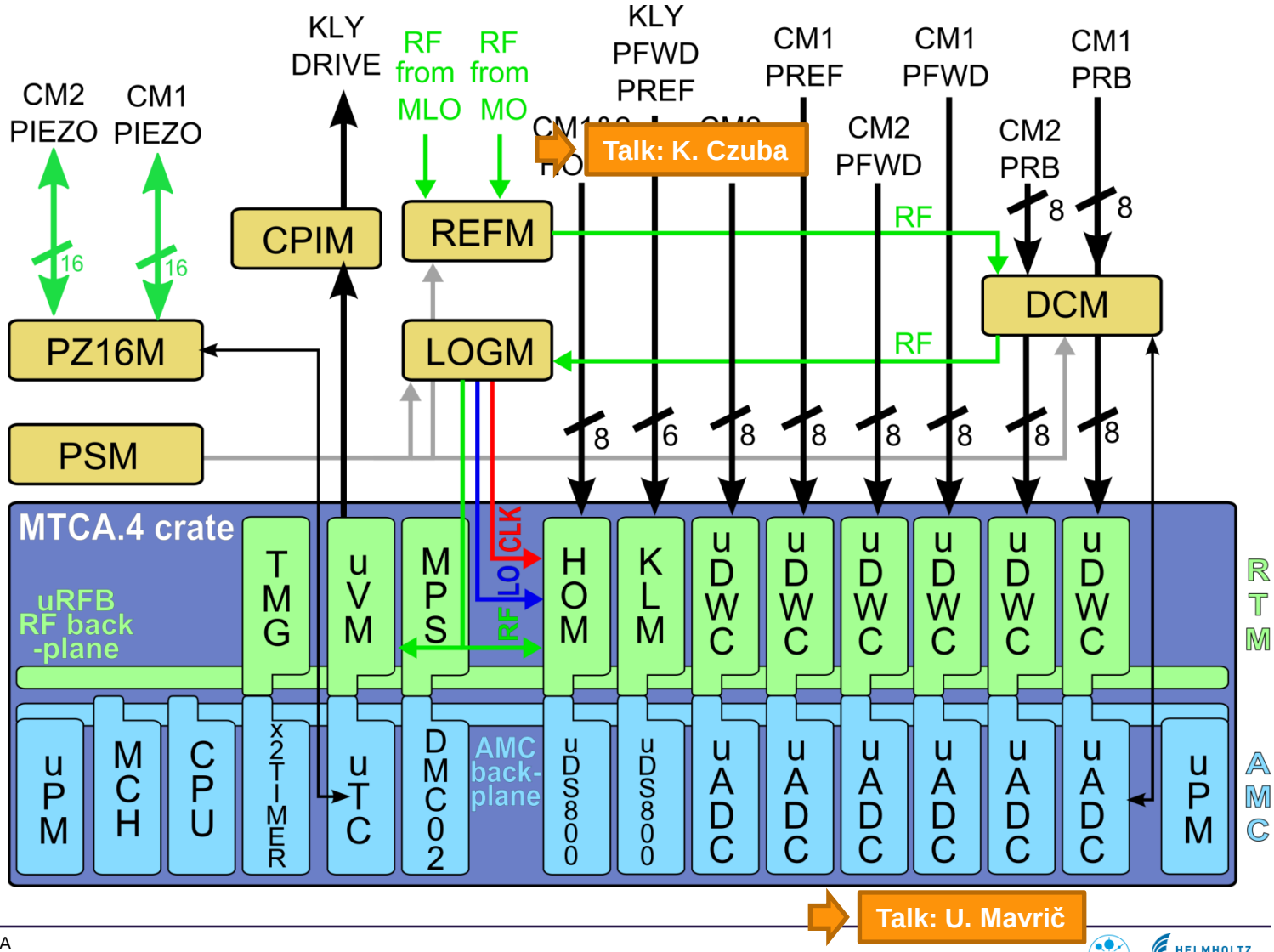

HIGHLIGHTS

LLRF System:

A few highlights

XFEL LLRF in a Table …

19” CHASSIS / INFRASTRUCTURE	MTCA.4 MODULE	SOFTWARE	FIRMWARE
PSM	MTCA.4 9U crate	LLRF controller	IQ detection
REFM	MTCA.4 2U crate	FSM	AP calculation
REFM-Interferometer	MTCA.4 uRFB	BLC	Cavity limiters and pre-limiters
REFM-L2RF	MTCA.4 uPM	LFF	$8\pi/9$ IIR filters
PZ16M	MTCA.4 uMCH	BBF	MIMO 4th order
LOGM	MTCA.4 uCPU	DAQ	Channel input delay
CPIM	MTCA.4 x2timer	Diagnostics server	Output rotation and delay
MO	MTCA.4 uADC	Klystron linearization	Virtual probes
MO-distribution	MTCA.4 uTC	Auto Q_L	Online detuning – Q_L
TMCB	MTCA.4 uDS800	Auto Piezo	Channel calibration
Piezo discharge	MTCA.4 uLOG_carrier	Auto tuner	Programmable attenuators
Reference line	MTCA.4 uLOG_RF	Quench detect	KLM
Interferometer	MTCA.4 DAMC02	Energy server	DCM control and communication
Injector racks / shielding	MTCA.4 RadMon	Q_L scan	PZ16M control and communication
Temp. controlled Racks	MTCA.4 uDWC (1.3GHz & 3.9GHz)	Piezo scan	Cavity simulation
Patch panels	MTCA.4 uVM (1.3GHz & 3.9GHz)	Tuner scan	Board & peripherals (Intern. Interface)
Outer rack cabling	MTCA.4 uKLM-RTM	Cavity modes identification	LLL
Inner rack cabling	MTCA.4 uHOM-RTM	KLM	CLK
Klystron test stand	MTCA.4 uDWC-VM	Waveguide pressure control	DAQ
MTCA.4 board tests setups	MTCA.4 eMCH	MO diagnostics	DAC
Chassis & crate system test setups	MTCA.4 ePM	Performance statistics	PCIe

HARDWARE HIGHLIGHTS

- RF backplane: **uRFB**

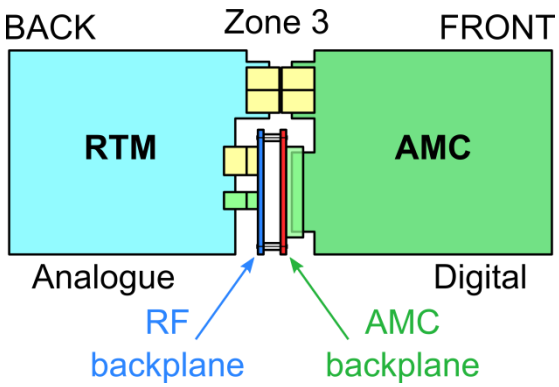

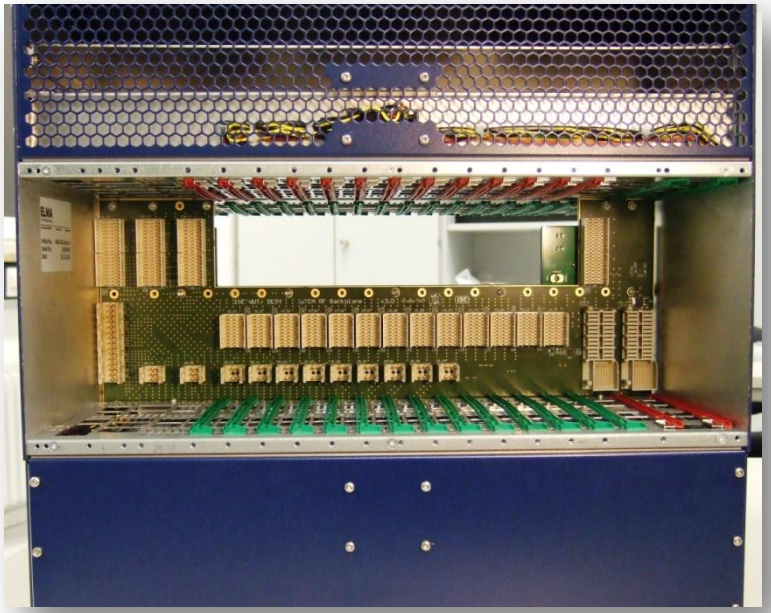

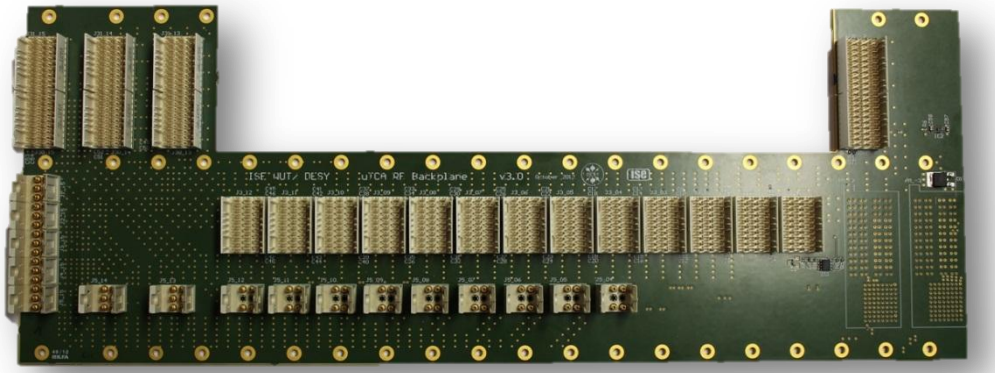

HARDWARE HIGHLIGHTS

- RF backplane: **uRFB**

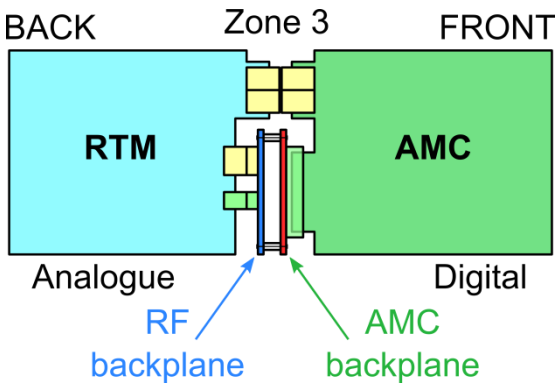

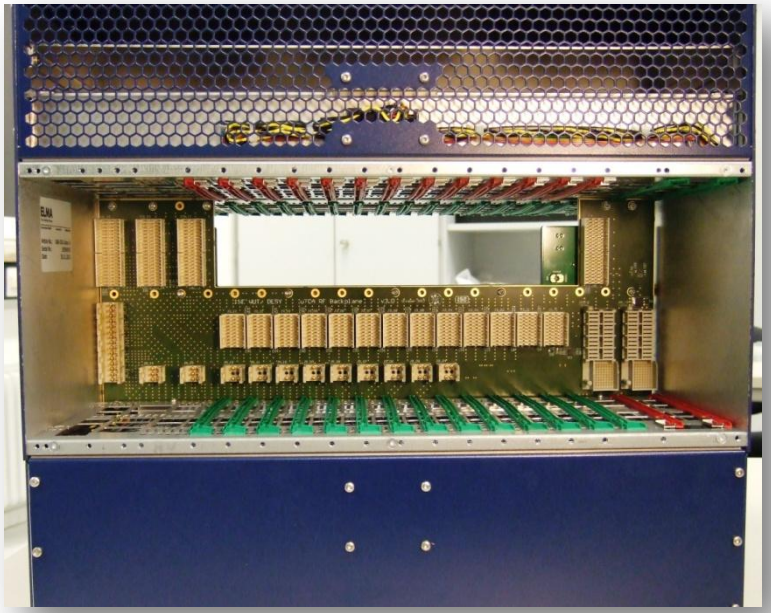

- Extended rear module: **eRTM**

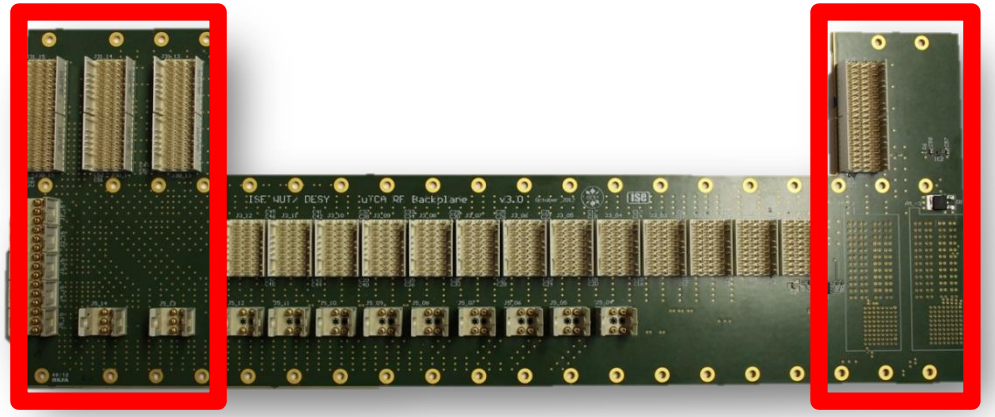

HARDWARE HIGHLIGHTS

- RF backplane: **uRFB**

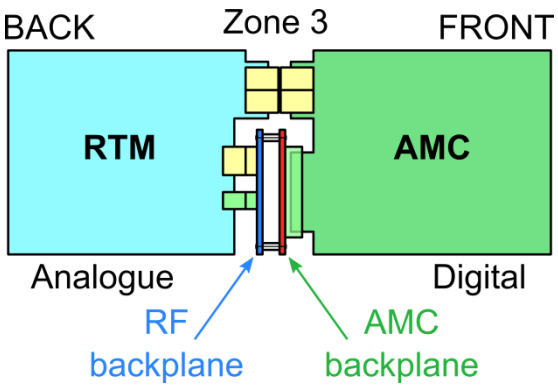

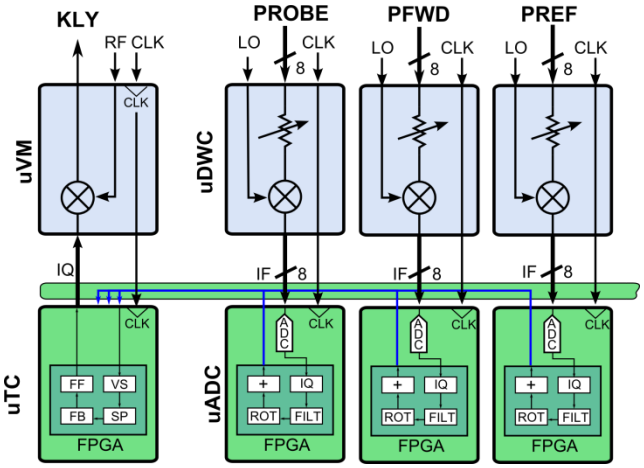

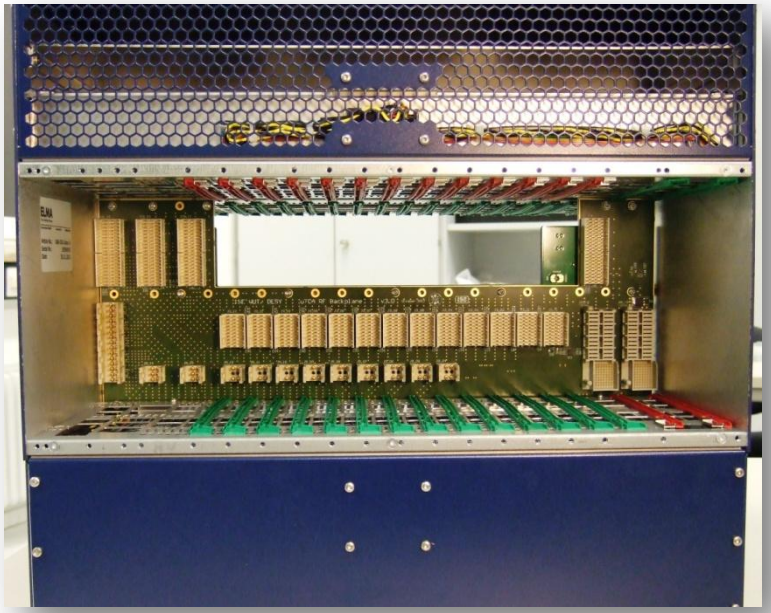

- Extended rear module: **eRTM**

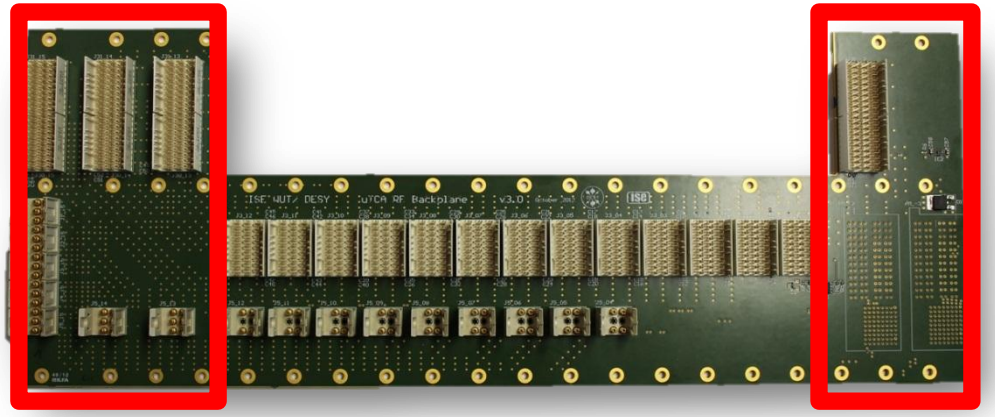

HARDWARE HIGHLIGHTS

- RF backplane: **uRFB** → Talk: K. Czuba

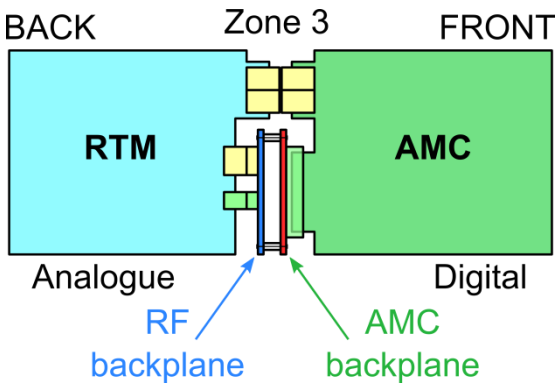

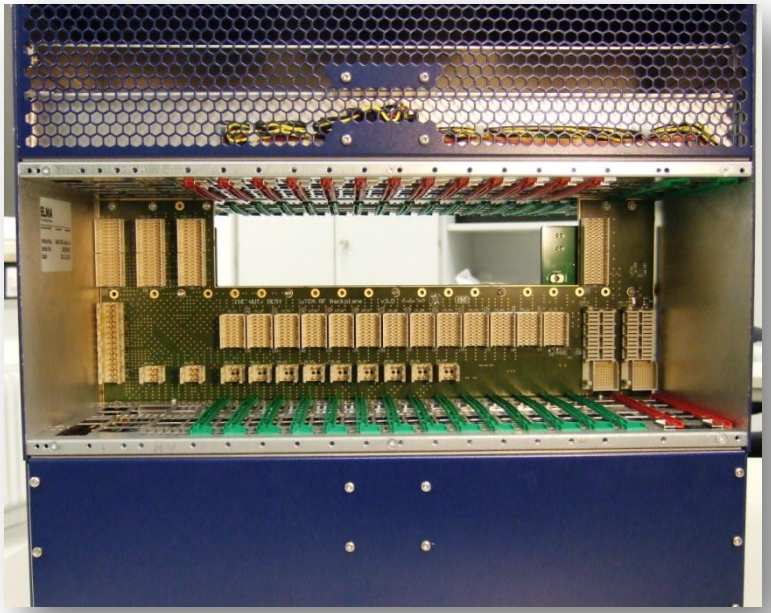

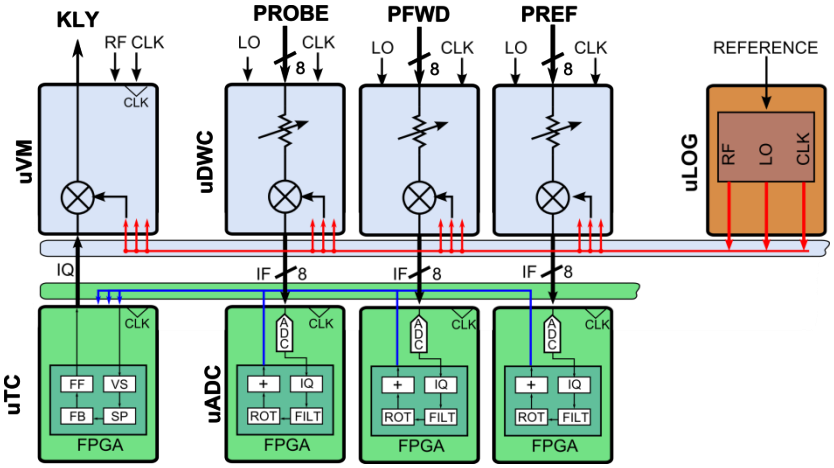

- Extended rear module: **eRTM**

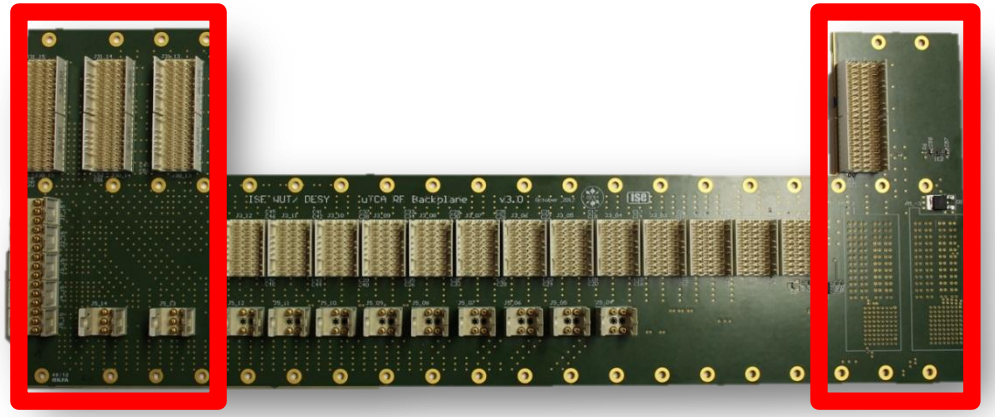

HARDWARE HIGHLIGHTS

- **uRFB** with **uLOG**

Poster: T. Rohlev

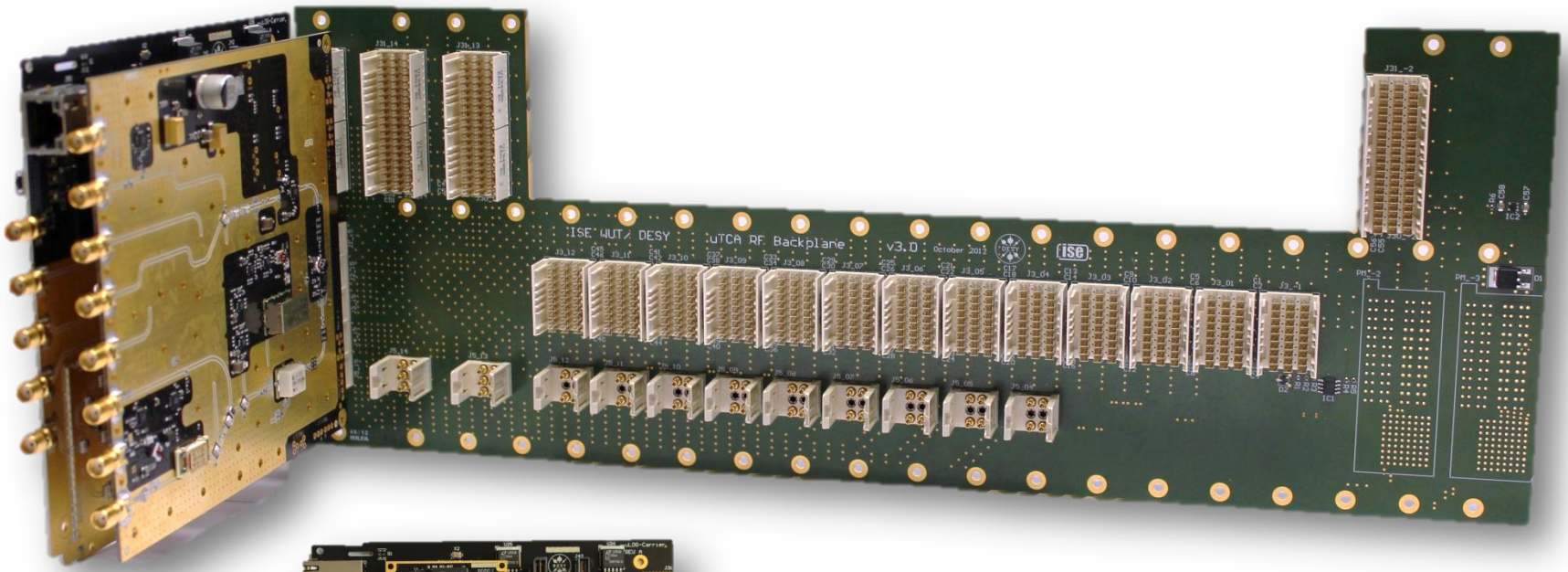

uLOG RF carrier

L3 = 21 RF stations
➔ 42 crates equipped with uRFB + uLOG

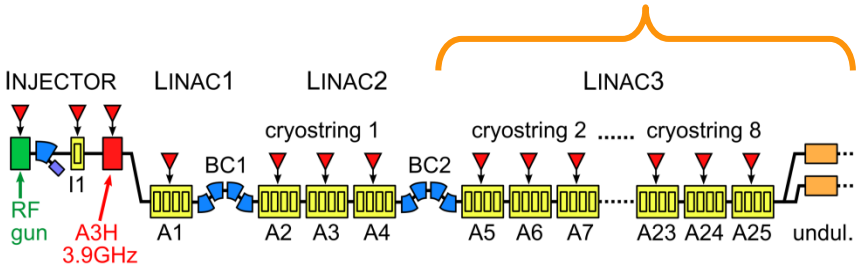

Courtesy U. Mavrič , T. Rohlev

HARDWARE HIGHLIGHTS

- 8 ch. down-converter 1 ch. up-converter **uDWC8-VM1**

Poster: M. Hoffmann

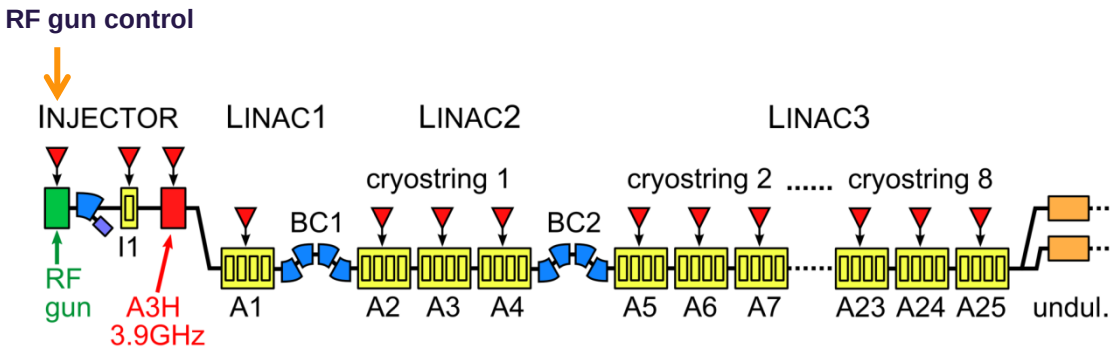

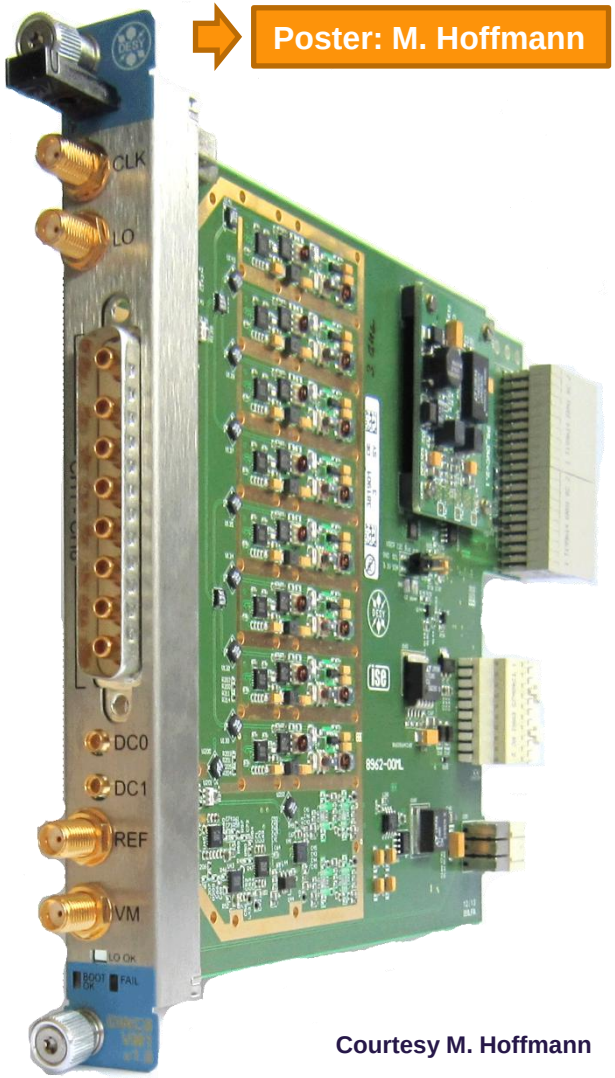

Courtesy M. Hoffmann

HARDWARE HIGHLIGHTS

- Direct sampling fast digitizer: **uDS800**
  - AMC
  - 8x channels
  - 800 MSPS
  - Possible applications (HOMs, KLM)

Talk: S. Bou Habib

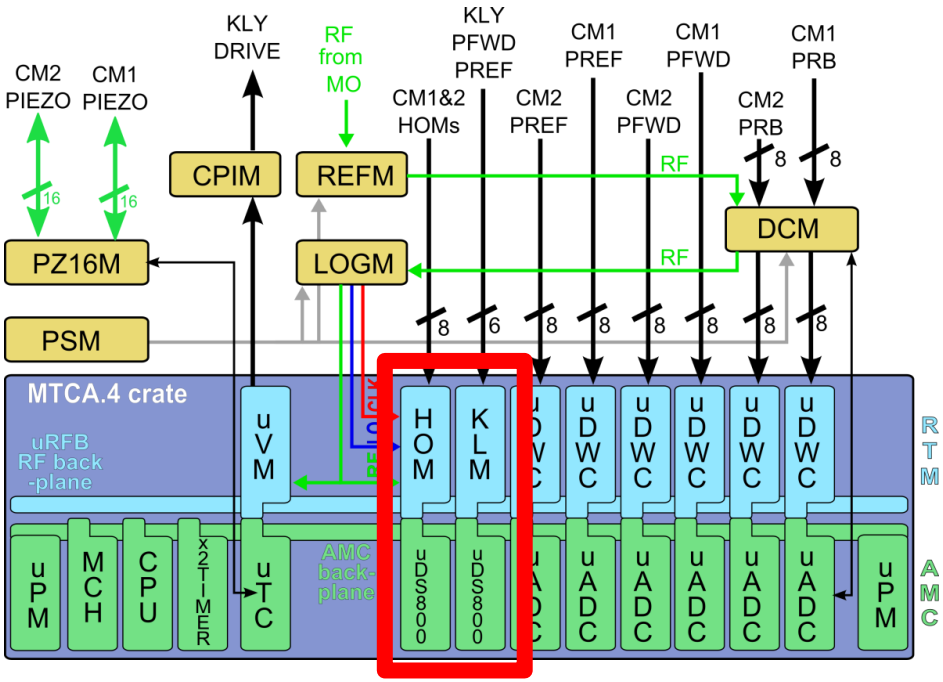

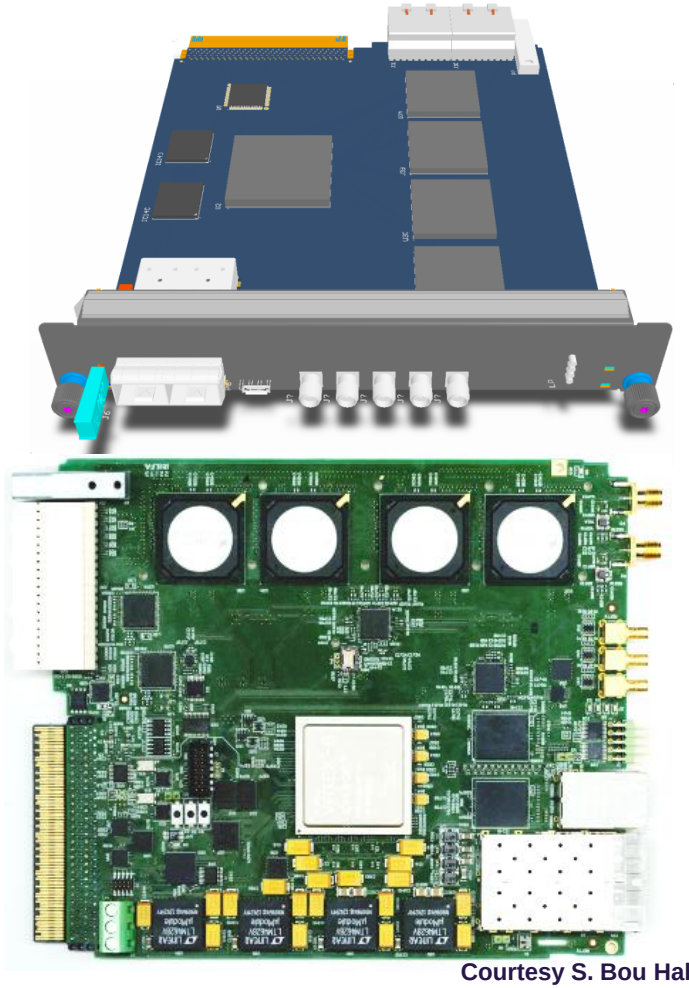

Courtesy S. Bou Habib

OPERATION HIGHLIGHTS

XFEL cryomodule LLRF tests*

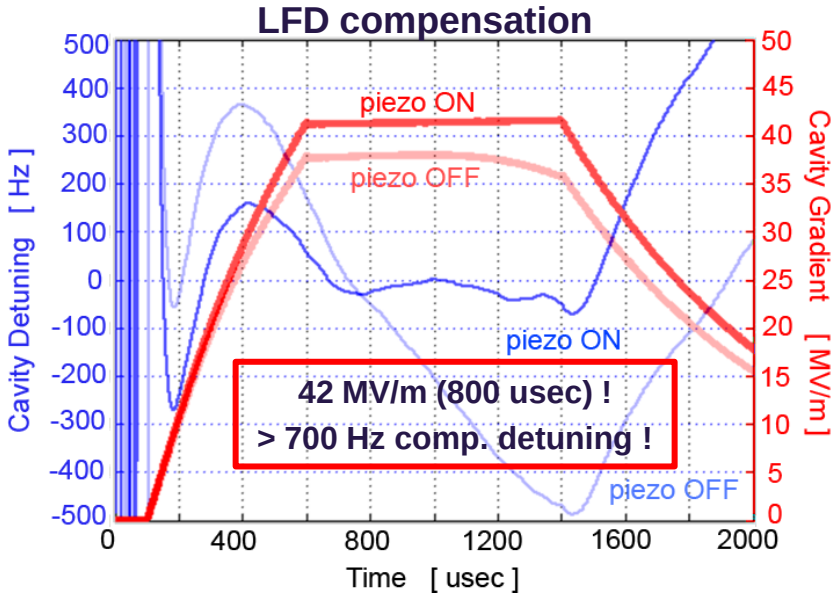

AMTF: Accelerator Module Test Facility

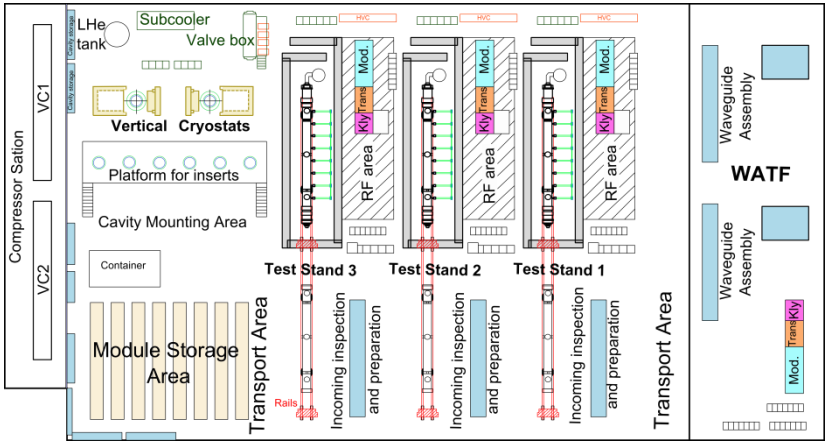

Poster : K. Przygoda

RF TESTS

- Cavity fundamental mode spectra measurements
- Higher order modes (HOM) couplers spectra
- Calibration of cold RF cables
- Warm coupler conditioning
- Coupler conditioning during cool-down
- Loaded Q measurements and adjustment
- Cavity gradient calibration
- Cavity gradient performance measurement
- Cryomodule dynamic heat-load measurement

LLRF TESTS

- Piezo capacitance measurement (before and during cooldown)
- Microphonics measurement
- Piezo scans (cavity detuning transfer function)
- $8\pi/9$ and $7\pi/9$ mode identification
- Cavity tuner motor characterization
- Cavity loaded Q motor characterization
- Lorentz force detuning compensation
- Closed-loop nominal gradient operation.

* References:
[1] "LLRF TESTING OF SUPERCONDUCTING CRYOMODULES FOR THE EUROPEAN XFEL" J, Branlard *et al.*, IPAC 2012, New Orleans, USA
[2] "LLRF TEST OF XFEL CRYOMODULES AT AMTF: FIRST EXPERIMENTAL RESULTS", J. Branlard *et al.* SRF 2013, Paris, France

OPERATION HIGHLIGHTS

- Improvement of LLRF control performance
  - Beam-based feedback (tested at FLASH) → Talk : S. Pfeiffer
    - ➔ factor of 3 improvement in arrival time jitter
  - Cavity fundamental modes (tested at FLASH)
    - ➔ detection & filtering of $8\pi/9$ and $7\pi/9$ modes
  - $\Delta A/A < 9\times10^{-5}$, $\Delta\phi < 0.008$ deg. achieved

Beam-based feedback

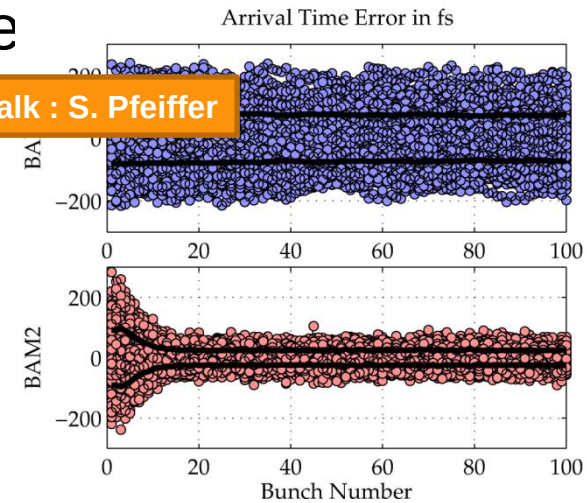

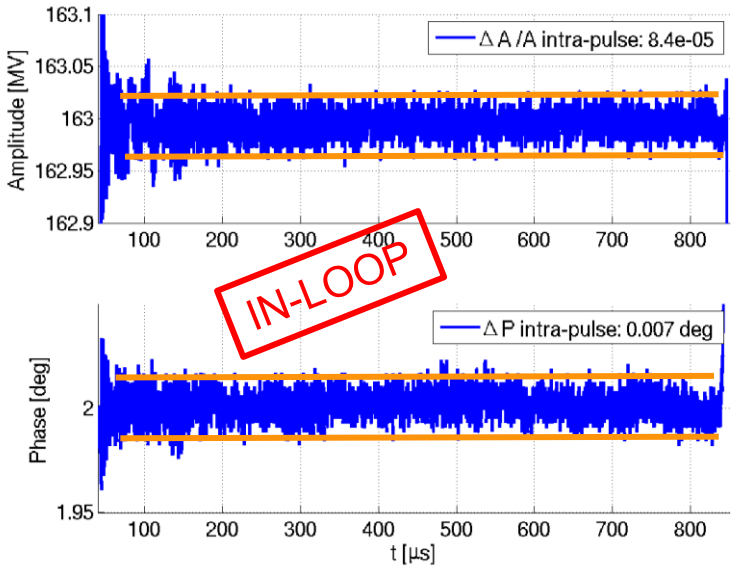

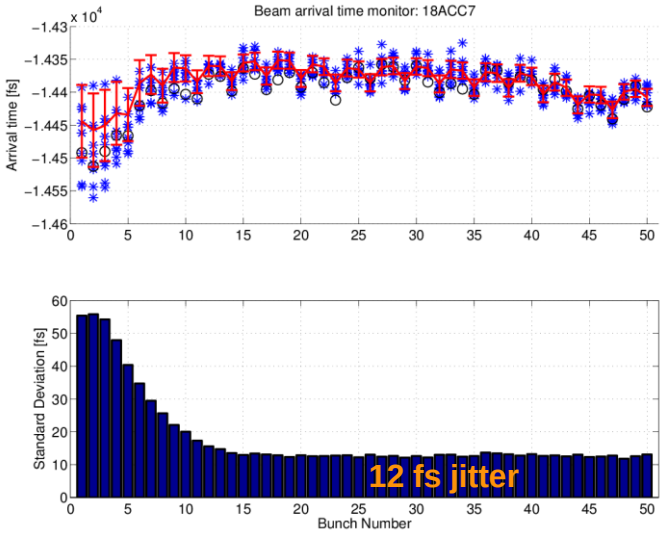

OPERATION HIGHLIGHTS

- **CW operations** with XFEL modules ⇨ **Poster : W. Cichalewski**

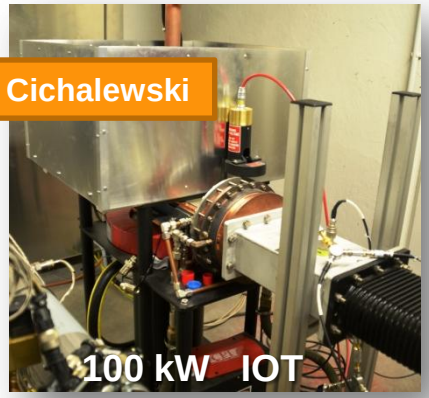

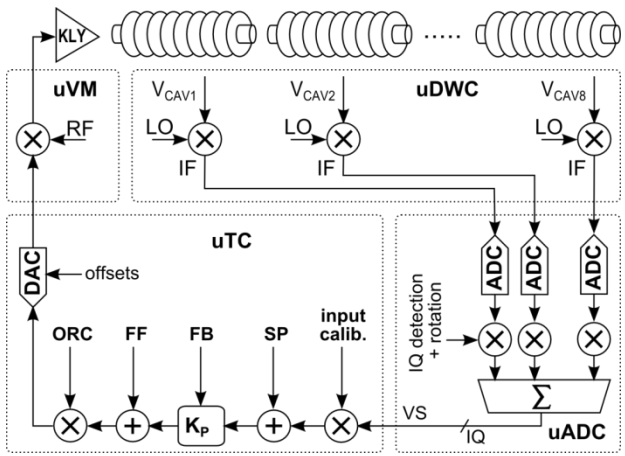

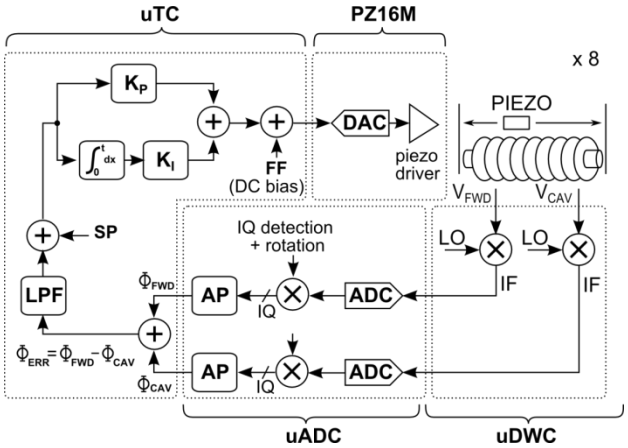

RF FB

- amplitude regulation: **6 x 10^{-3} % RMS** (in-loop)
- phase regulation: **0.0098 deg. RMS** (in-loop)

PZ FB

- microphonics suppression from **70 Hz** to **< 2 Hz**
- still problems, more evaluation time required

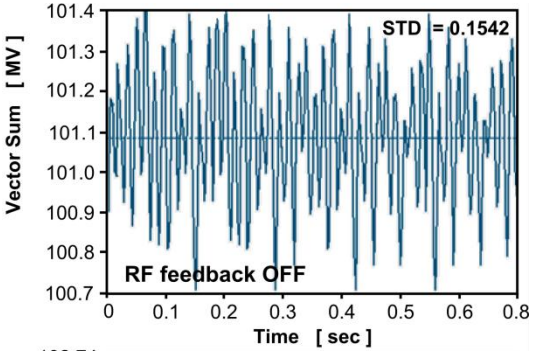

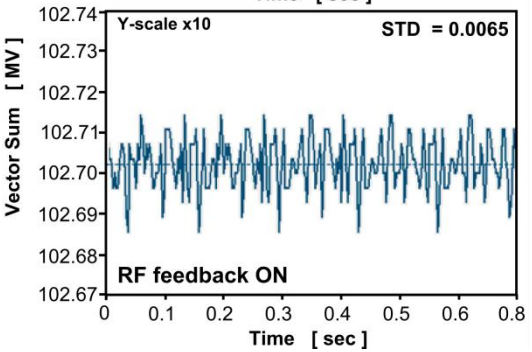

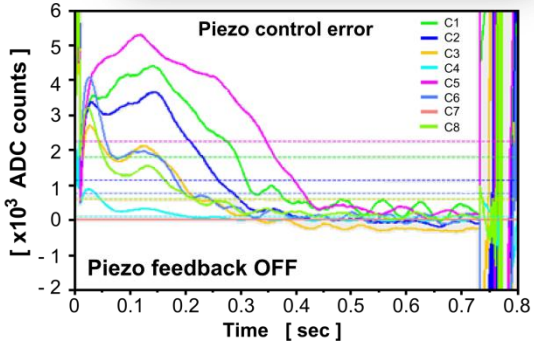

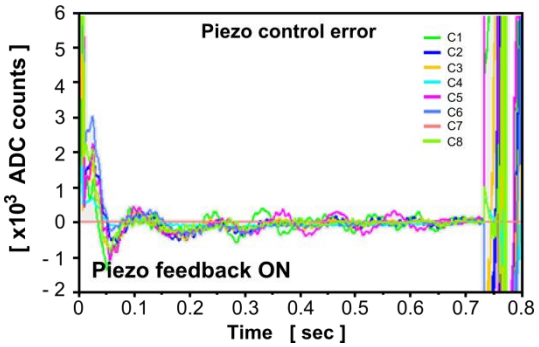

* References:
"LLRF SYSTEM DESIGN AND PERFORMANCE FOR XFEL CRYOMODULES CONTINUOUS WAVE OPERATION",
J. Branlard *et al.* SRF 2013, Paris, France

SCHEDULE

XFEL and LLRF System:

schedule

SCHEDULE

- RF gun commissioning — **Oct 2013**
- LINAC1 (4 cryomodules) — **Q1 2014**
  - ➔ installation
  - ➔ pre-commissioning follows
- 3rd harmonic cavity testing — **Q1 2014**
- 1nd cryo-string (12 cryomodules) — **Q2 2014**
- …
- 7th cryo-string — **Feb. 2015**
- 8th cryo-string — **Apr. 2015**

Likely to shift ~ 6 mo.

- Cold commissioning — **Jun. 2015**
- LLRF ready for 1st beam — **Sep. 2015**
- LLRF ready for nom. beam — **Feb. 2016**

LLRF MASS PRODUCTION

- PRR: Project Readiness Review

LLRF MASS PRODUCTION

- PRR: Project Readines
- Call for tender
- Licensing companies

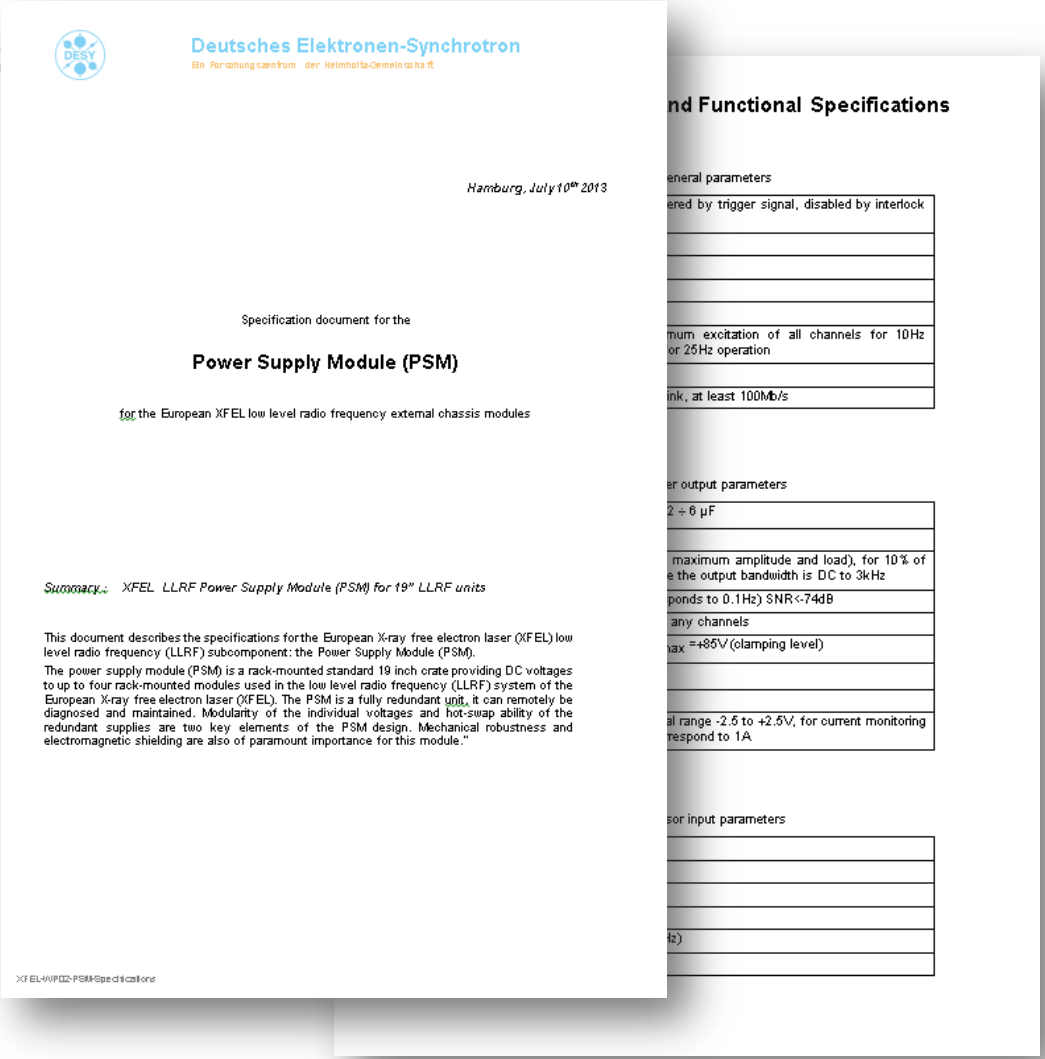

Deutsches Elektronen-Synchrotron

Ein Forschungszentrum der Helmholtz-Gemeinschaft

Hamburg, July 10th 2013

Specification document for the

Power Supply Module (PSM)

for the European XFEL low level radio frequency external chassis modules

Summary : *XFEL LLRF Power Supply Module (PSM) for 19" LLRF units*

This document describes the specifications for the European X-ray free electron laser (XFEL) low level radio frequency (LLRF) subcomponent: the Power Supply Module (PSM).

The power supply module (PSM) is a rack-mounted standard 19 inch crate providing DC voltages to up to four rack-mounted modules used in the low level radio frequency (LLRF) system of the European X-ray free electron laser (XFEL). The PSM is a fully redundant unit, it can remotely be diagnosed and maintained. Modularity of the individual voltages and hot-swap ability of the redundant supplies are two key elements of the PSM design. Mechanical robustness and electromagnetic shielding are also of paramount importance for this module."

XFEL-WP02-PSM-Specifications

nd Functional Specifications

eneral parameters

ered by trigger signal, disabled by interlock

mum excitation of all channels for 10Hz or 25Hz operation

ink, at least 100Mb/s

er output parameters

2 ÷ 6 µF

maximum amplitude and load), for 10% of e the output bandwidth is DC to 3kHz

ponds to 0.1Hz) SNR<-74dB

any channels

ax =+85V (clamping level)

al range -2.5 to +2.5V, for current monitoring respond to 1A

sor input parameters

Hz)

LLRF MASS PRODUCTION

- PRR: Project Readiness Revie
- Call for tender
- Licensing companies
- Quality control (test stands)

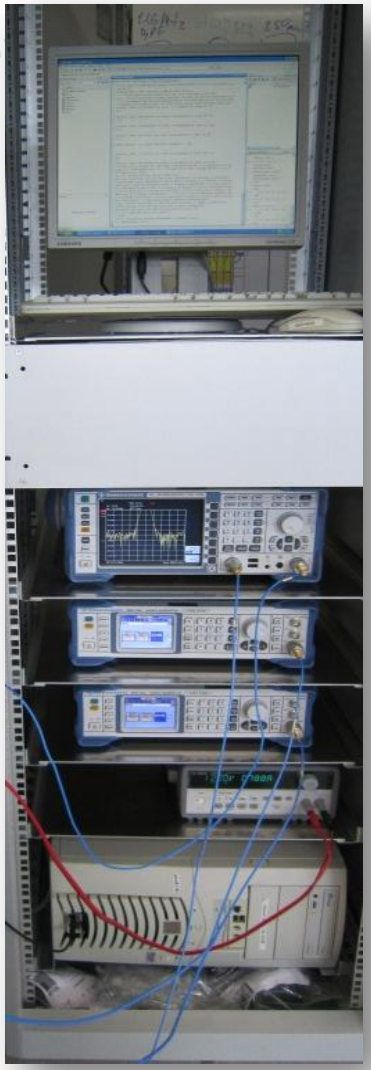

Example :

15 minutes / uDWC

x 300

= 2 weeks

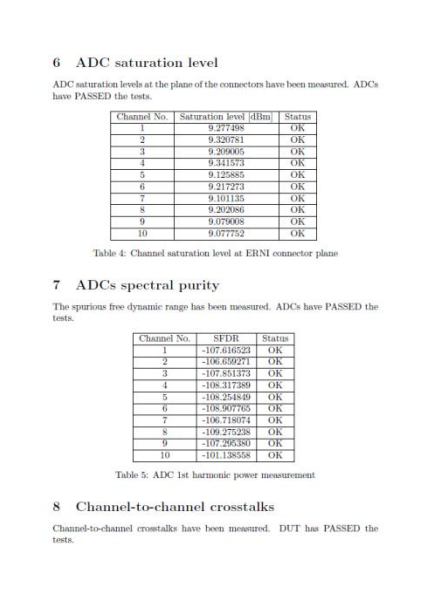

6 ADC saturation level

ADC saturation levels at the plane of the connectors have been measured. ADCs have PASSED the tests.

Channel No.	Saturation level [dBm]	Status
1	9.277498	OK
2	9.320781	OK
3	9.209005	OK
4	9.341573	OK
5	9.125885	OK
6	9.217273	OK
7	9.101135	OK
8	9.202086	OK
9	9.079008	OK
10	9.077752	OK

Table 4: Channel saturation level at ERNI connector plane

7 ADCs spectral purity

The spurious free dynamic range has been measured. ADCs have PASSED the tests.

Channel No.	SFDR	Status
1	-107.616523	OK
2	-106.659271	OK
3	-107.851373	OK
4	-108.317389	OK
5	-108.254849	OK
6	-108.907765	OK
7	-106.718074	OK
8	-109.275238	OK
9	-107.295380	OK
10	-101.138558	OK

Table 5: ADC 1st harmonic power measurement

8 Channel-to-channel crosstalks

Channel-to-channel crosstalks have been measured. DUT has PASSED the tests.

LLRF MASS PRODUCTION

- PRR: Project Readiness Review
- Call for tender
- Licensing companies
- Quality control (test stands)
- Inventory (database)

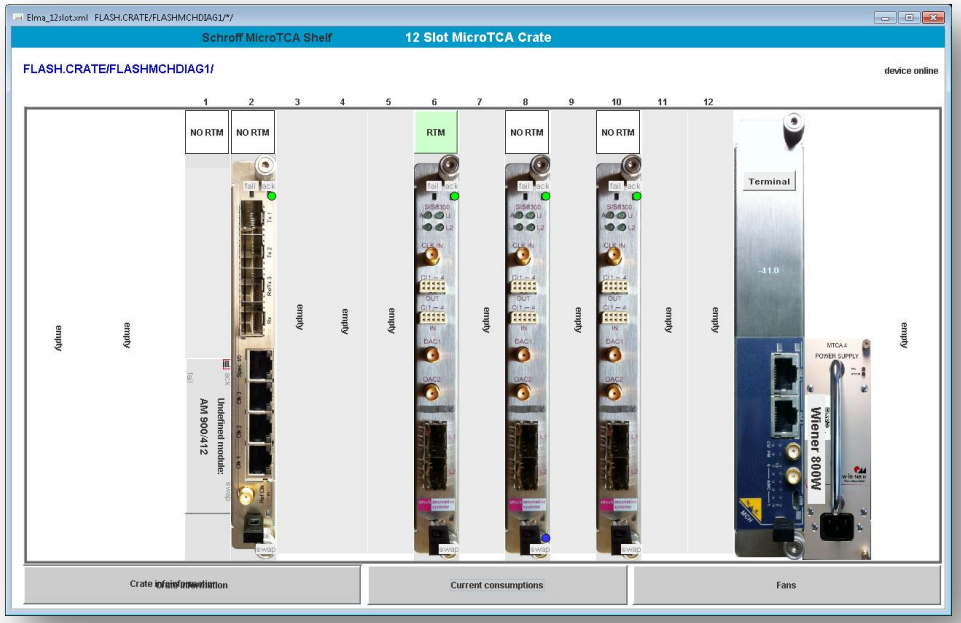

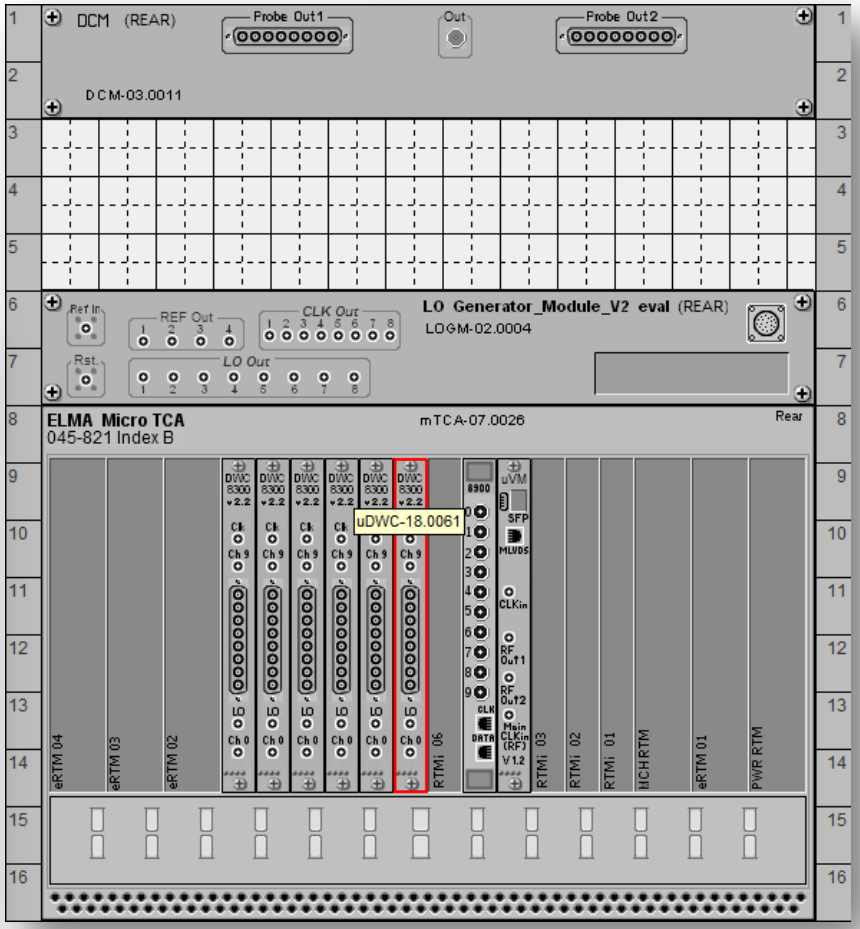

LLRF MASS PRODUCTION

- PRR: Project Readiness Review
- Call for tender
- Licensing companies
- Quality control (test stands)
- Inventory (database)
- …
- RFI: Ready for installation
- RF commissioning
- Ready for beam
- Beam commissioning
- ~~Done ?~~
- Upgrades

2014

2015

2016

2017

XFEL SNEAK PREVIEW

XFEL SNEAK PREVIEW

XFEL SNEAK PREVIEW

XFEL SNEAK PREVIEW

XFEL SNEAK PREVIEW

XFEL SNEAK PREVIEW

THANK YOU !

BACK UP SLIDES

MTCA.4 core LLRF modules

- MTCA.4 LLRF digitizer: **SIS8300L**
  - 10 ch. digitizer
  - Virtex VI
  - Application firmware block diagram:

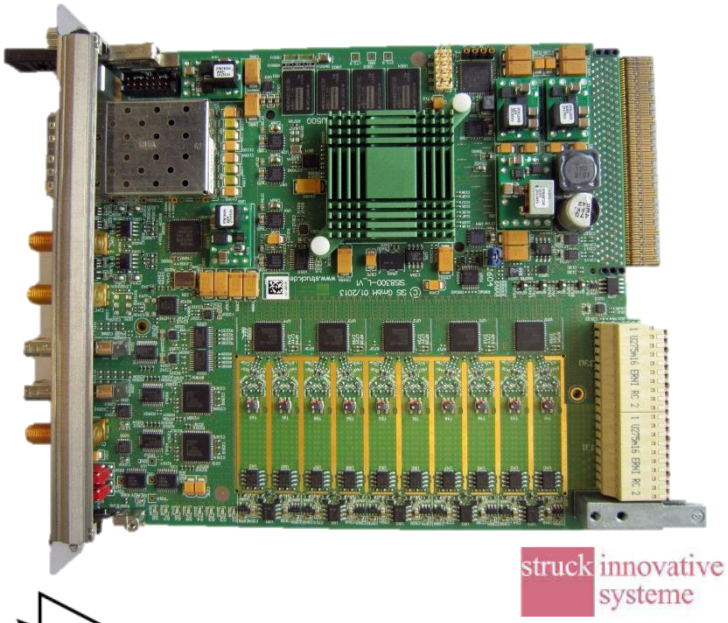

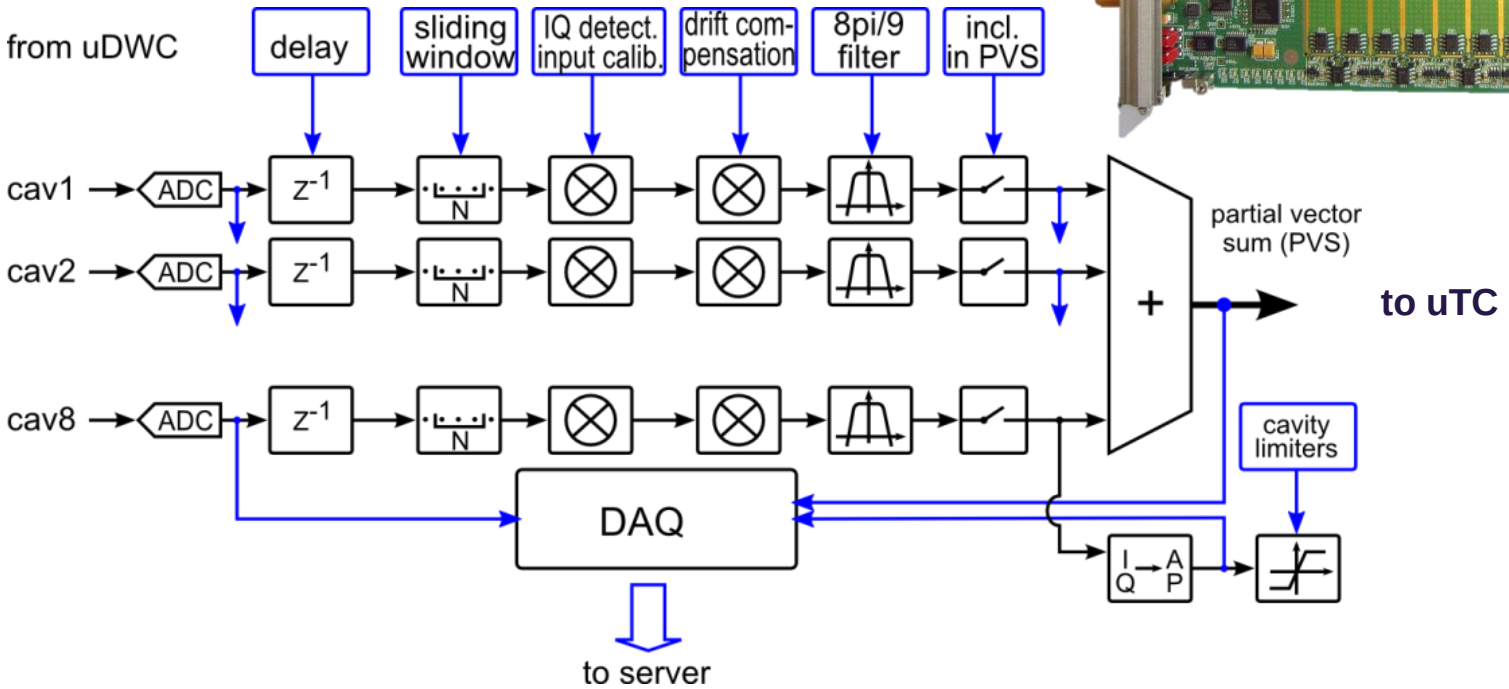

MTCA.4 core LLRF modules

- MTCA.4 LLRF controller: **uTC**
  - Current version 1.3 (Virtex V)
  - Version 2.0 (Kintex VII)
  - 0.5 Tbps processing power
  - 8x SPF+ on front panel
  - Application firmware block diagram:

uTC v.13

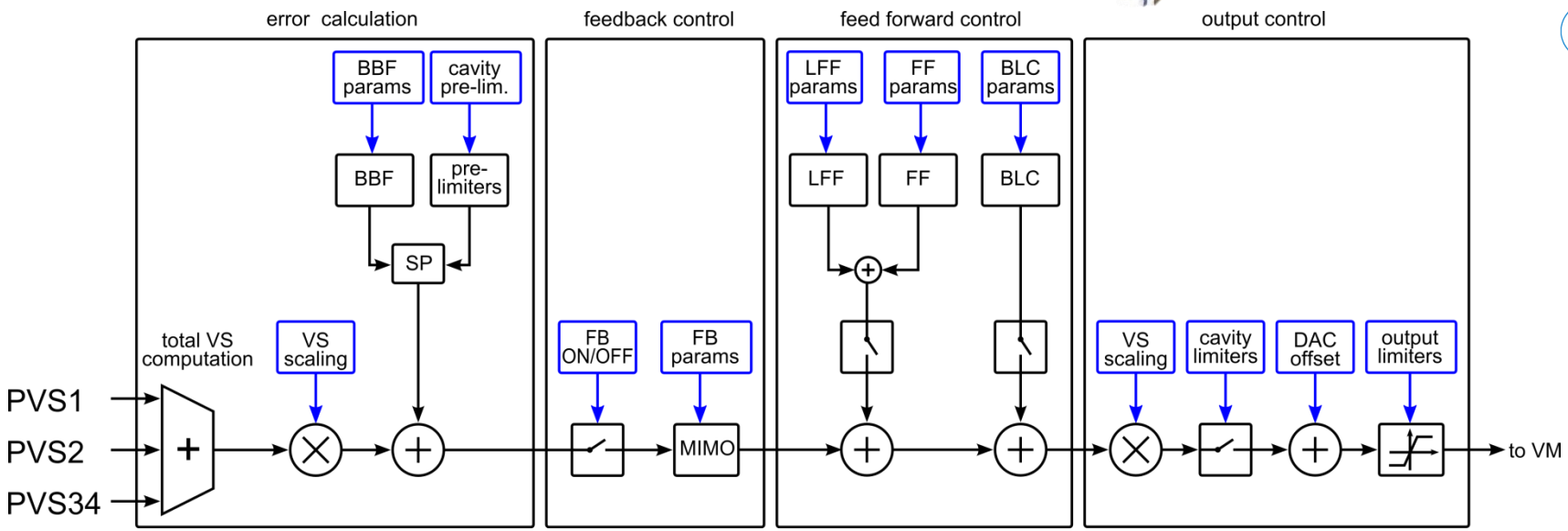

MTCA.4 HIGHLIGHTS

- MTCA.4 Piezo driver module: **uPZT4**

XFEL Piezo driver : **PZ16M**

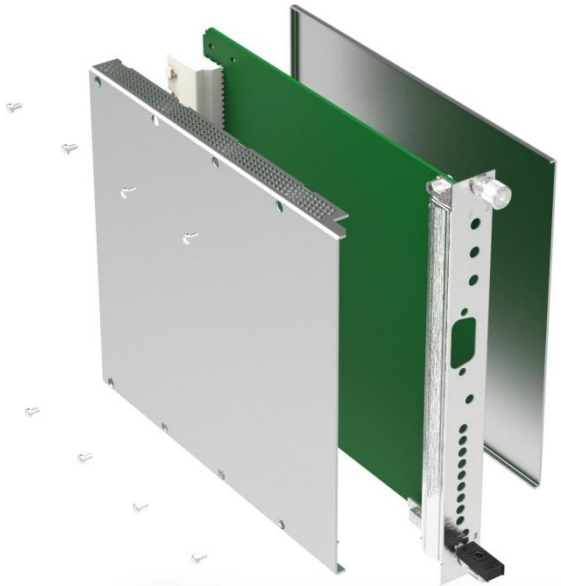

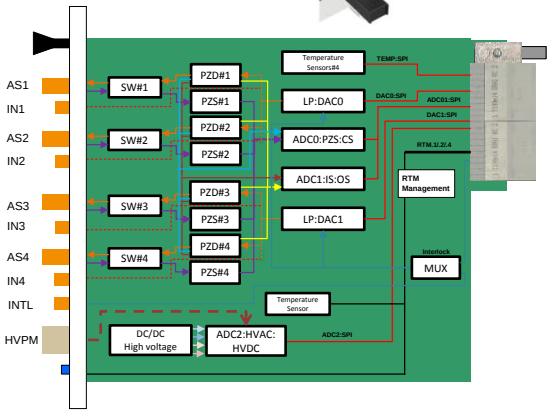

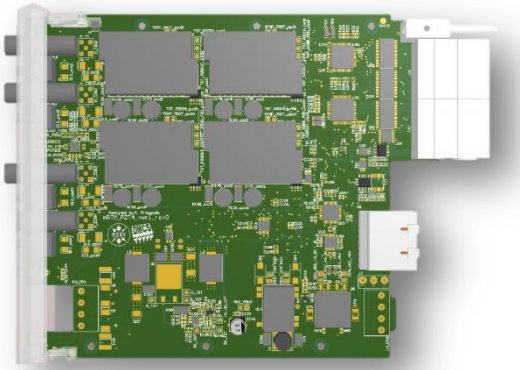

Courtesy K. Przygoda

XFEL LLRF : L2 & L3

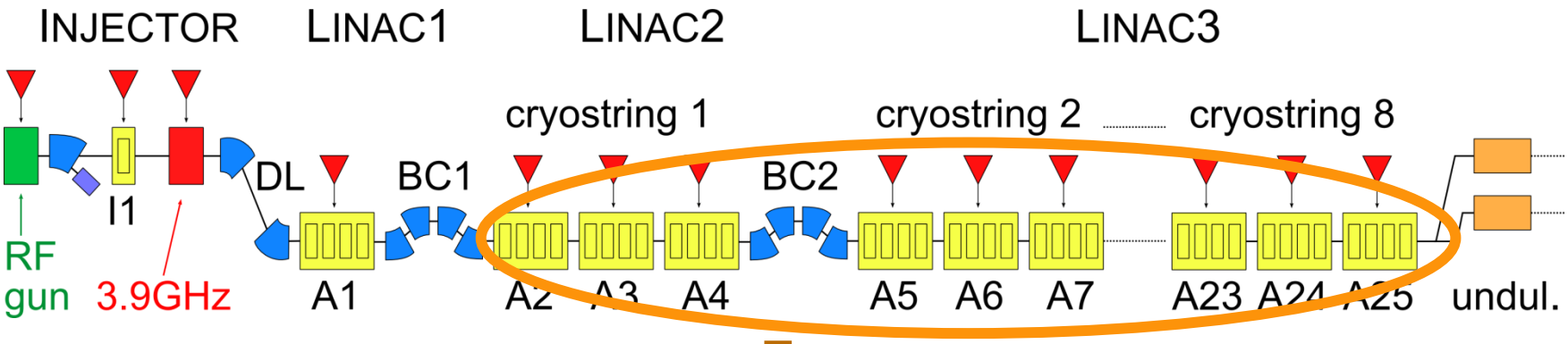

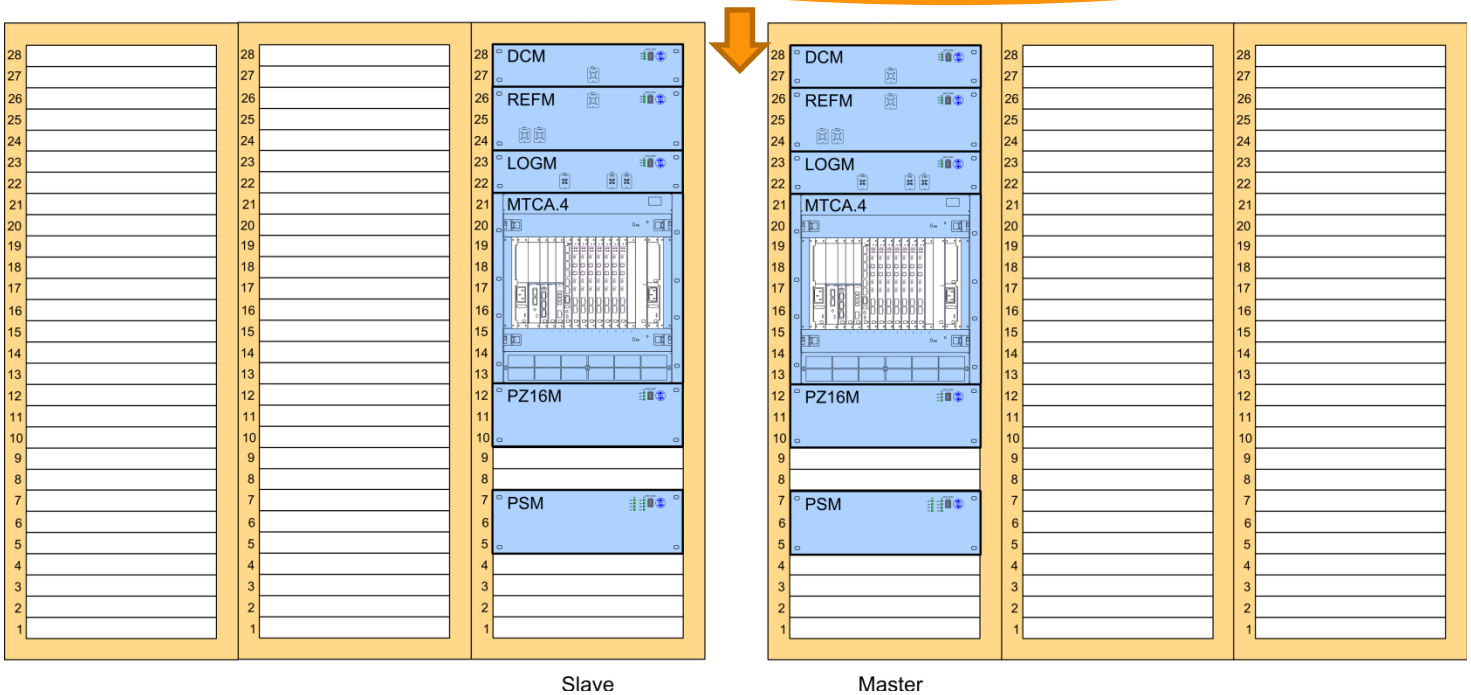

XFEL LLRF : L1

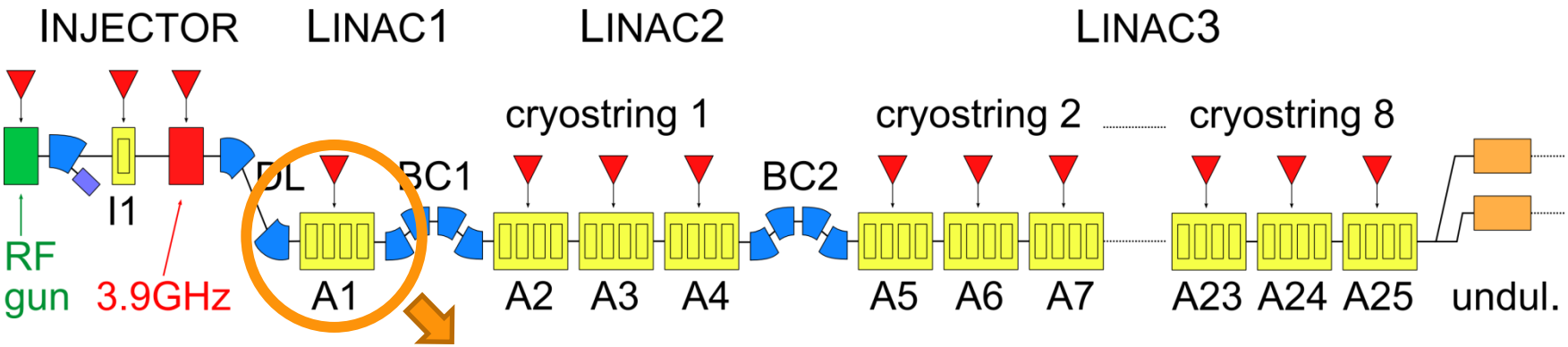
INJECTOR
LINAC1
LINAC2
LINAC3
cryostring 1
cryostring 2
cryostring 8
DL
BC1
BC2
I1
RF gun
3.9GHz
A1
A2
A3
A4
A5
A6
A7
A23
A24
A25
undul.

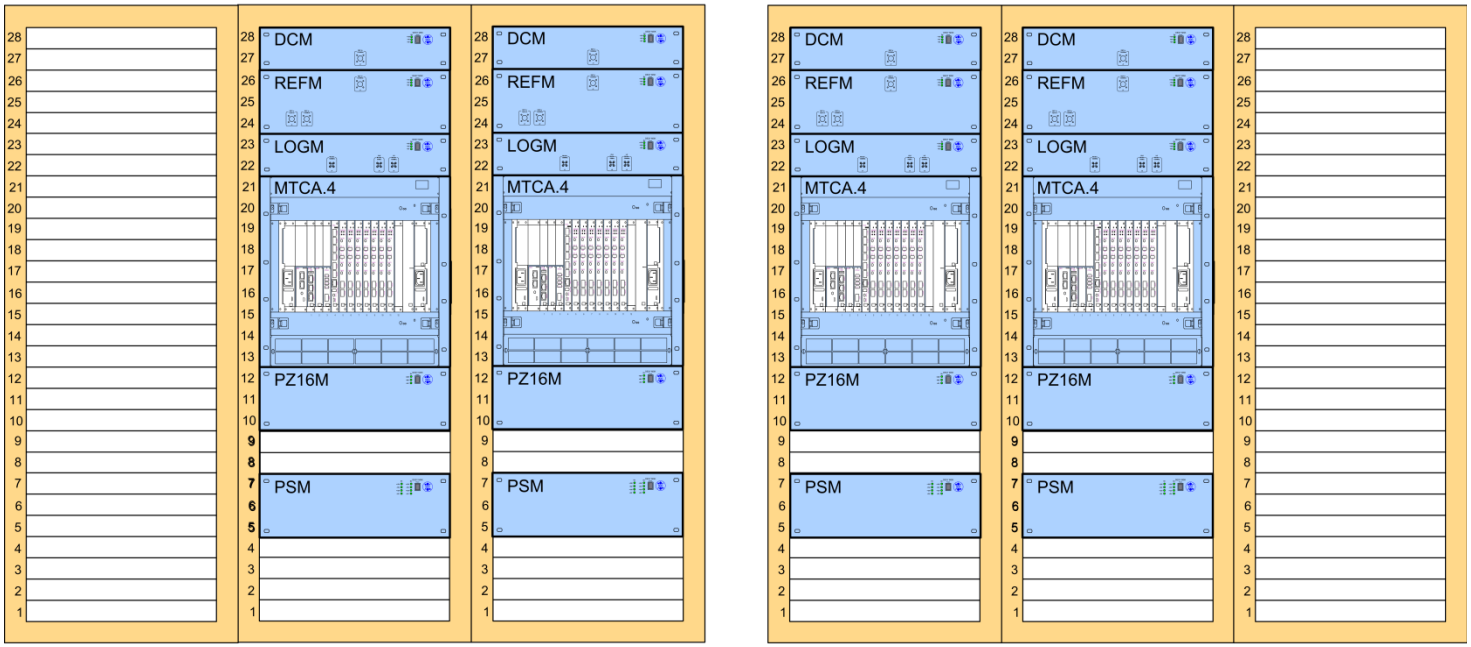
DCM
REFM
LOGM
MTCA.4
PZ16M
PSM
Slave (SPARE)
Slave (MAIN)
Master (MAIN)
Master (SPARE)

XFEL LLRF : INJECTOR

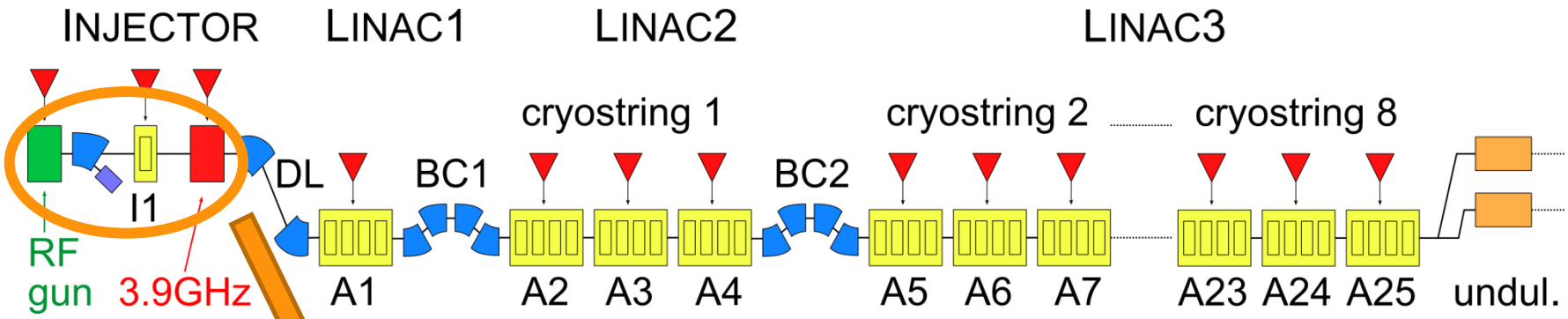

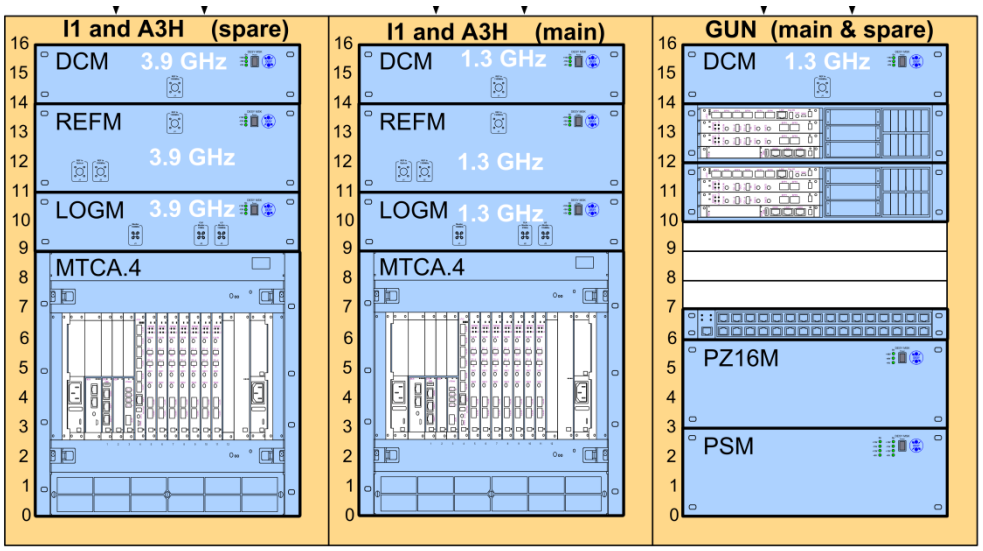

- **DCM**: Drift Calibration Module
- **REFM**: Reference synchronization and distribution Module
- **LOGM**: Local Oscillator Generation and distribution Module
- **MTCA.4**
- **PZ16M**: Piezo controller Module (16 cavities)
- **PSM**: Power Supply Module

LLRF Installations

LLRF Installations

LLRF : MASTER OSCILLATOR & REFERENCE

- Master oscillator
  - room layout in XTIN done
  - acclimatized racks ordered
- Reference line distribution
  - on-going prototypes performance tests
  - final design done

Master oscillator temperature controlled rack

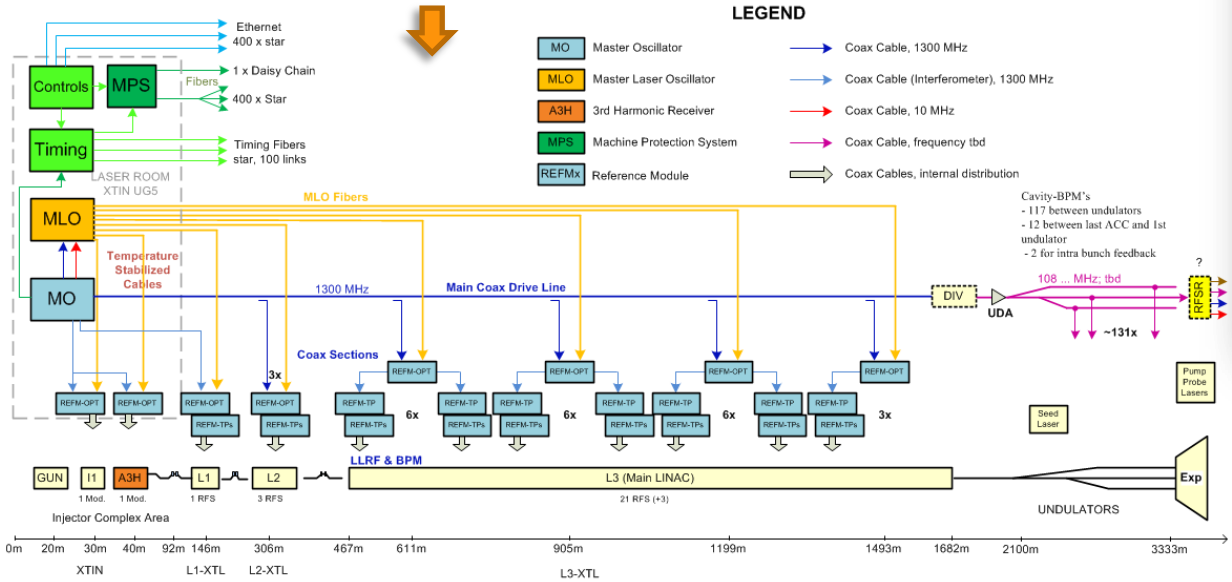

Reference line distribution scheme