Status and Perspectives of the KATRIN Experiment

Susanne Mertens
for the KATRIN Collaboration

BERKELEY LAB
Lawrence Berkeley National Laboratory

Overview

- Why is a direct neutrino mass measurement so important?
- How does KATRIN work?

- Present: Main Spectrometer Commissioning
- Future: Search for heavy Neutrinos

Karlsruhe Tritium Neutrino Experiment

- Next-generation direct ν-mass experiment
- International Collaboration: 120 members
- 15 institutions in 5 countries: D, US, UK, CZ, RUS
- Reference ν-mass sensitivity: $m(\nu_e)$ = 200 meV, after 3 years

Motivation

Cosmology

model-dependent
potential: Σm_i = 20-50 meV
e.g. Planck

$$m_\nu = \sum_i m_i$$

Search for 0νßß

model-dependent
potential: $m_{ßß}$ = 20-50 meV
e.g. MAJORANA

$$m_{\beta\beta} = \left| \sum_{\mathrm{i}} U_{\mathrm{ei}}^2 \cdot m_{\nu_{\mathrm{i}}} \right|$$

Kinematics of ß-decay

model-independent
potential: m_ν = 200 meV
e.g. KATRIN

$$m_{\nu_{\mathrm{e}}}^2 = \sum_{\mathrm{i}} |U_{\mathrm{ei}}|^2 \cdot m_{\nu_{\mathrm{i}}}^2$$

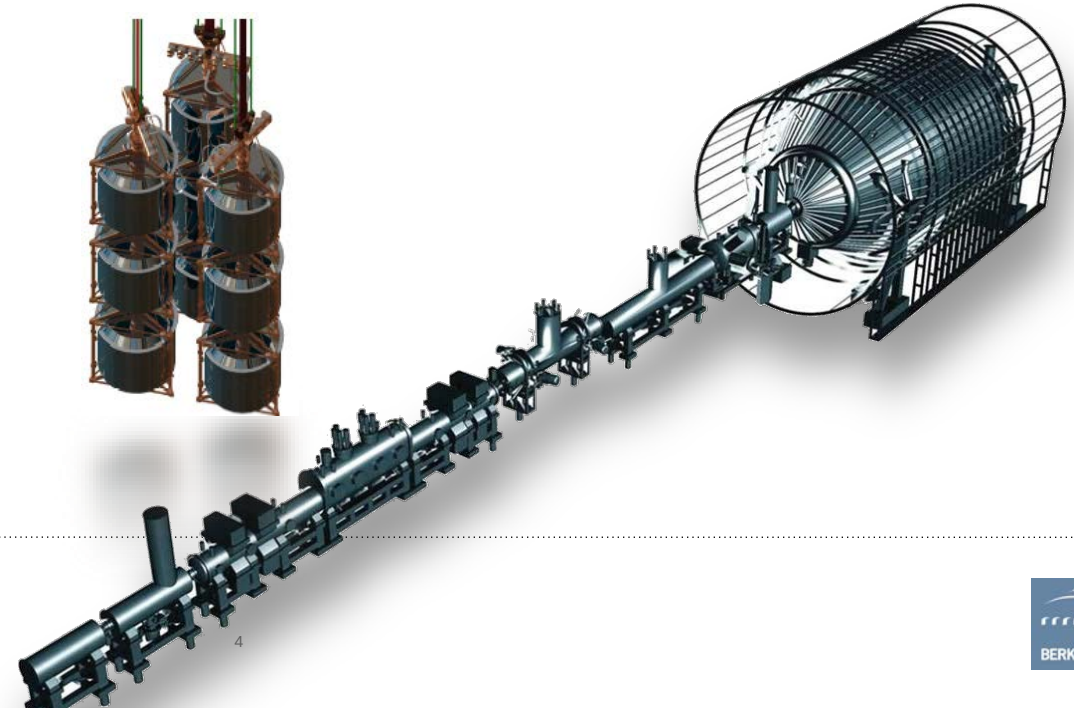

Overview

- Why is a direct neutrino mass measurement so important?
- How does KATRIN work?

- Present: Main Spectrometer Commissioning
- Future: Search for heavy Neutrinos

KATRIN Overview

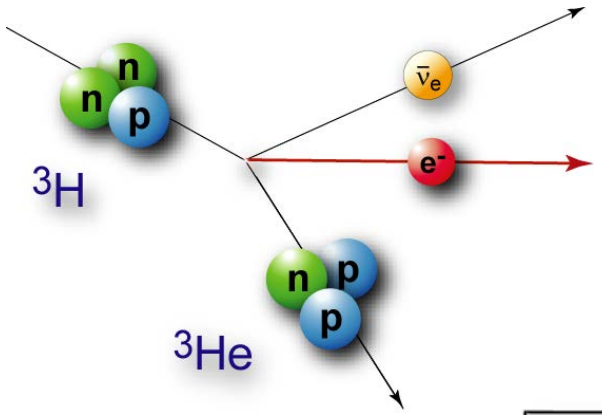

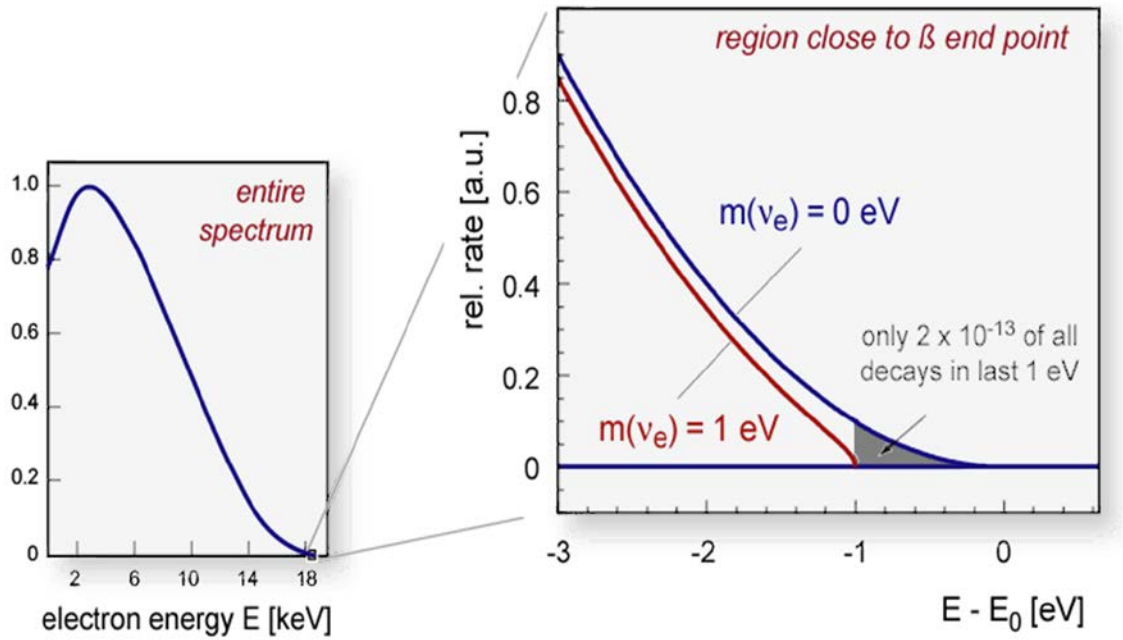

KATRIN Overview

Source Section

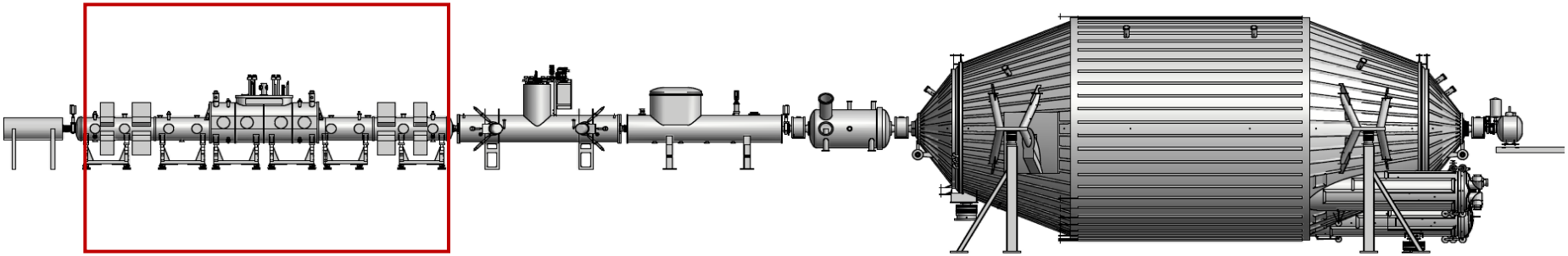

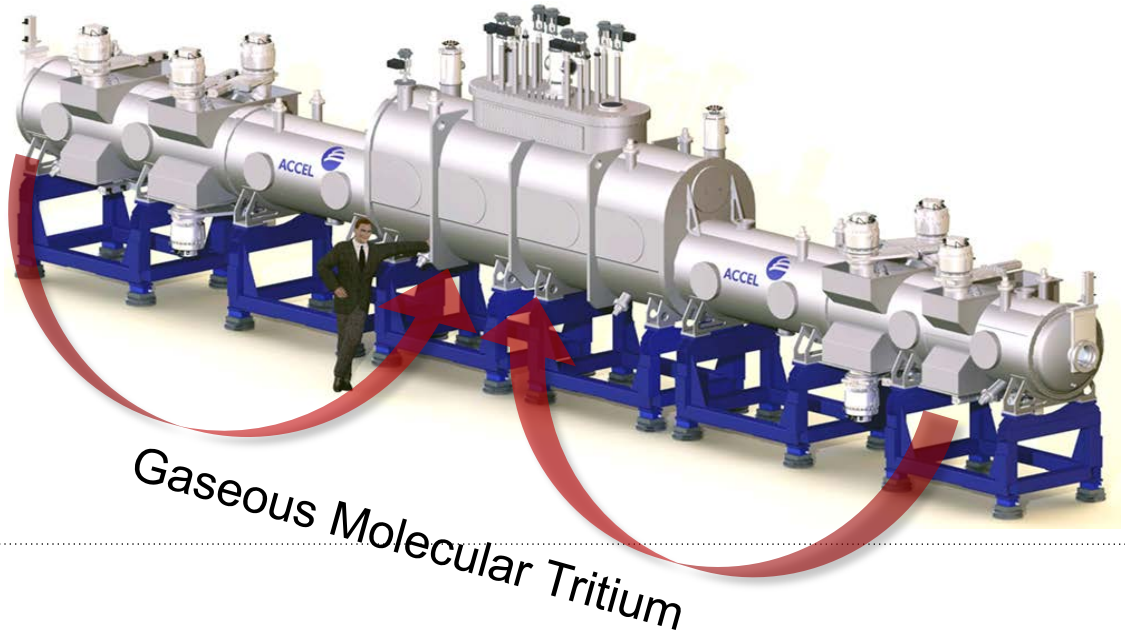

Yearly throughput:

10 kg (≡ ITER)

ß- intensity:

10^{11} electrons/s

KATRIN Overview

Source Section

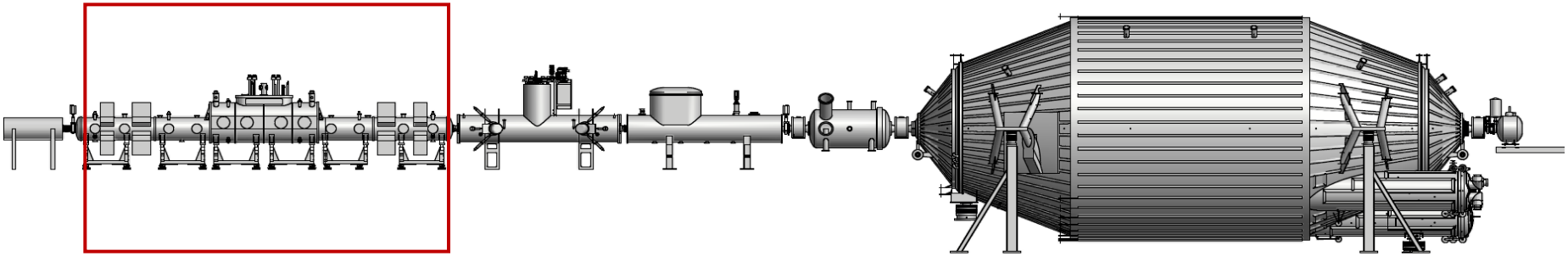

WGTS Demonstrator

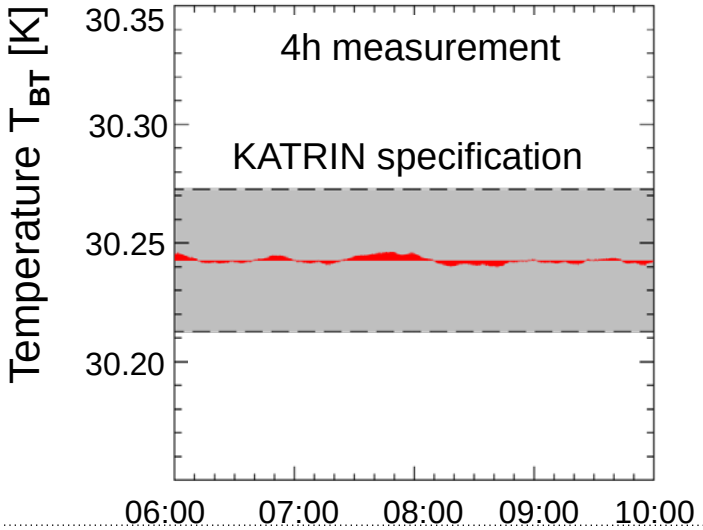

S. Grohmann et al., Cryogenics 55 (2013) 5

KATRIN Overview

Transport Section

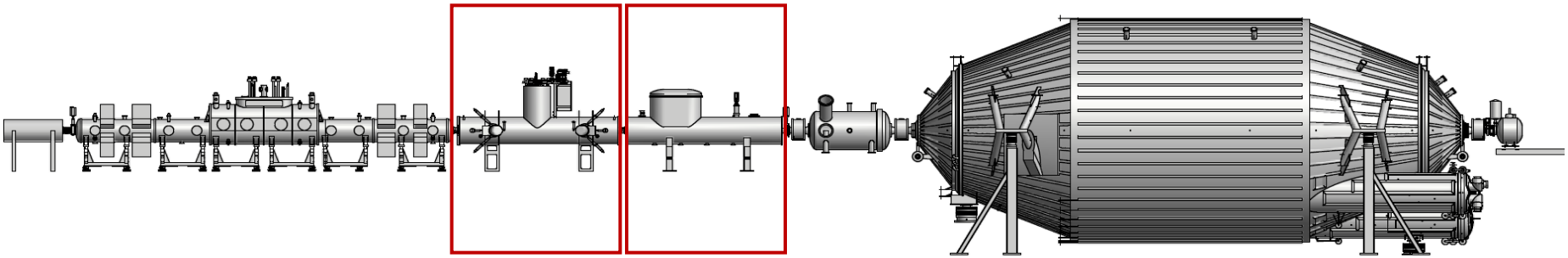

Differential pumping section

Cryogenic pumping section

Reduction of tritium flow by 14 orders of magnitude

S. Lukić, Vacuum 86 (2012) 8

KATRIN Overview

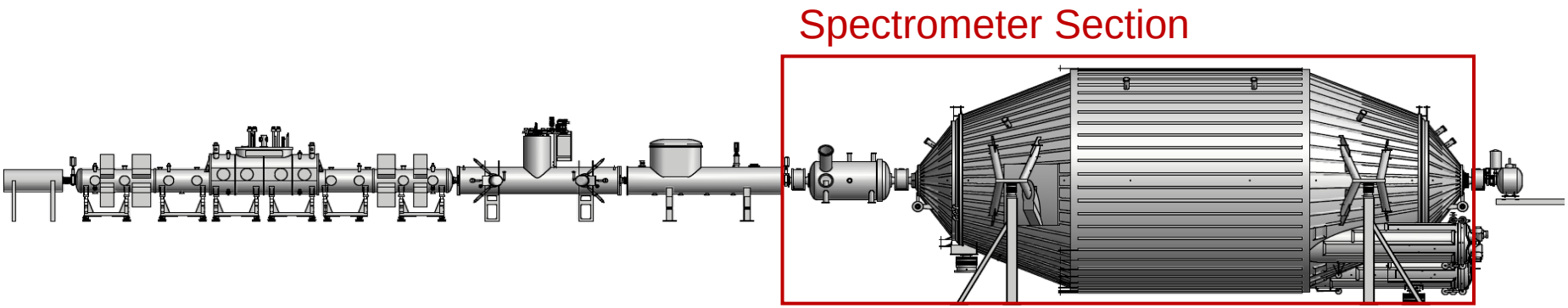

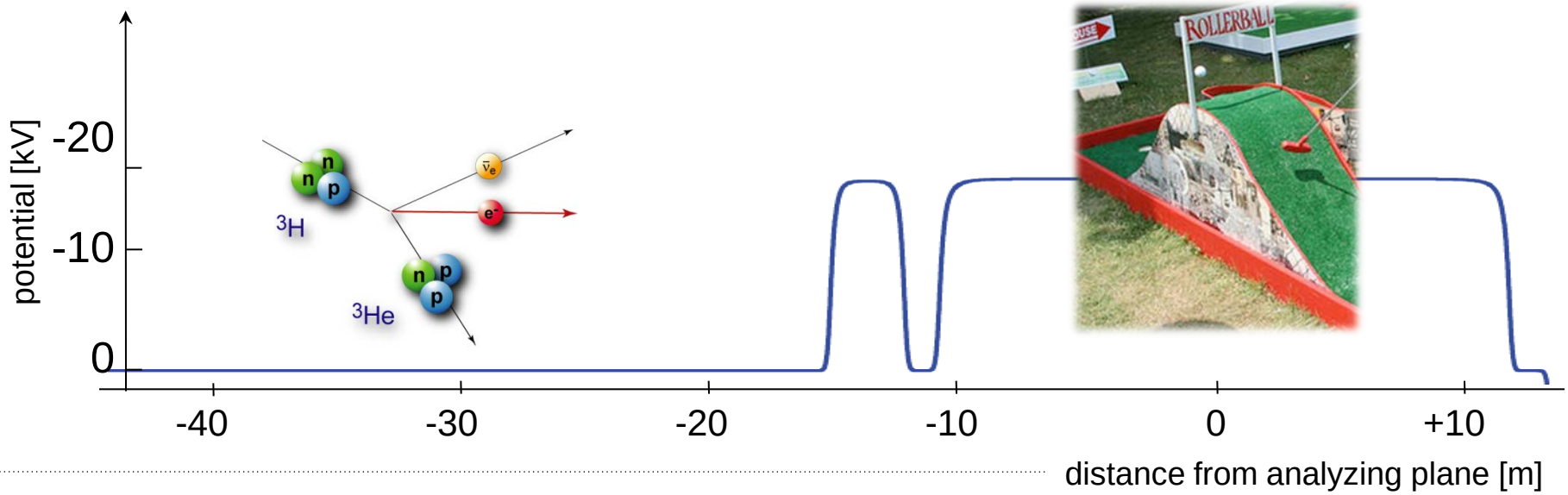

KATRIN Overview

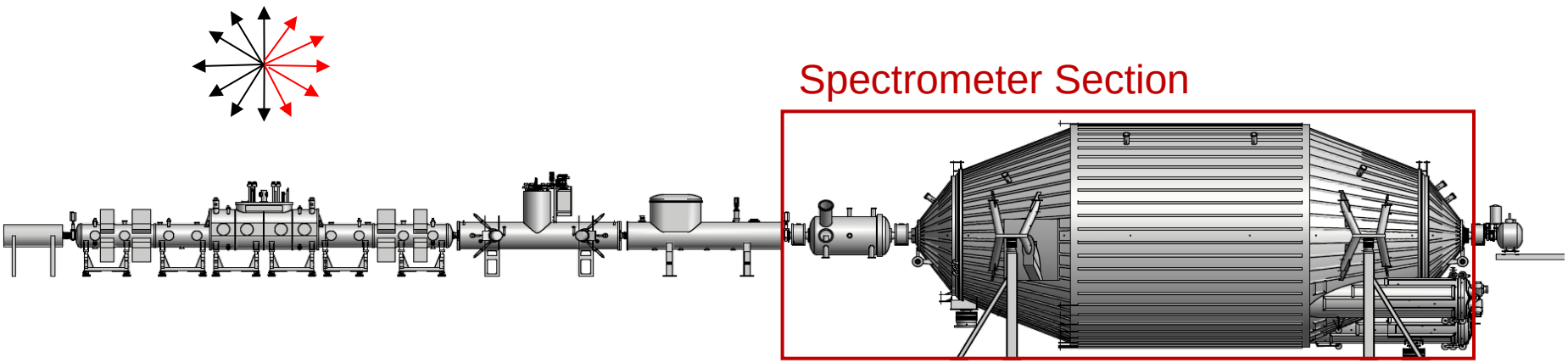

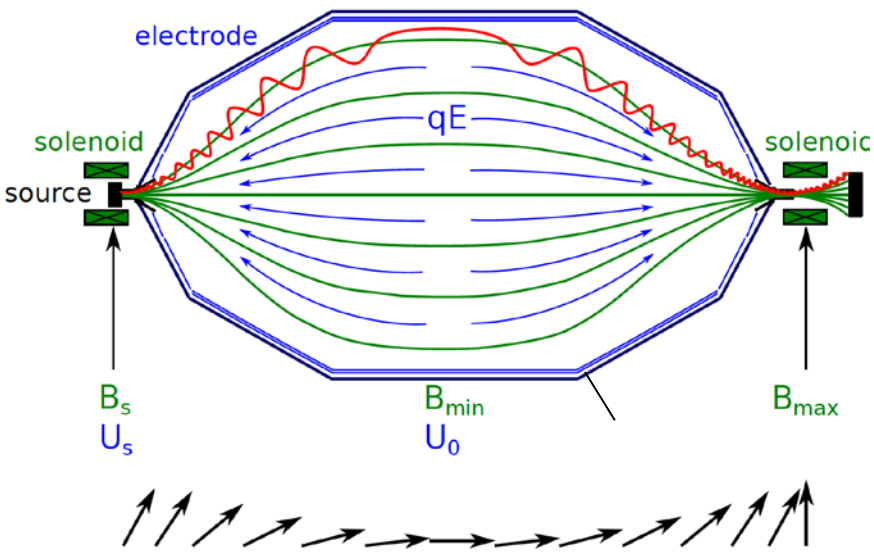

MAC-E Principle:

Large angle acceptance

High energy resolution (0.93 eV)

KATRIN Overview

Detector Section

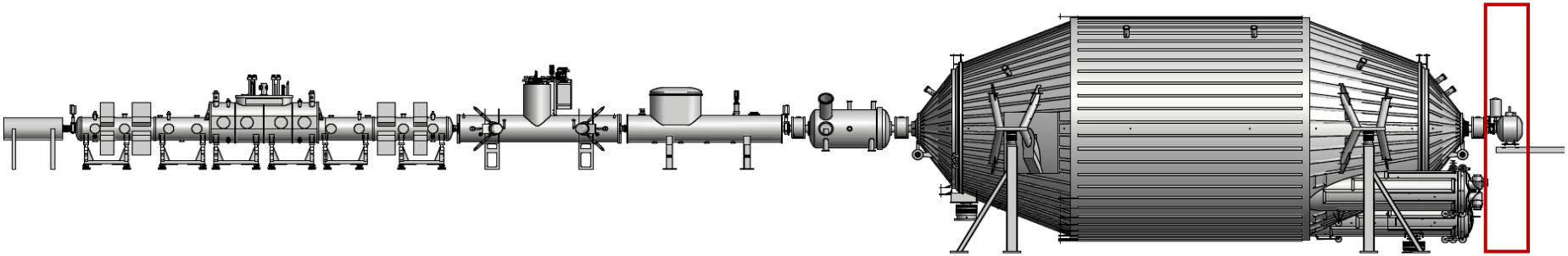

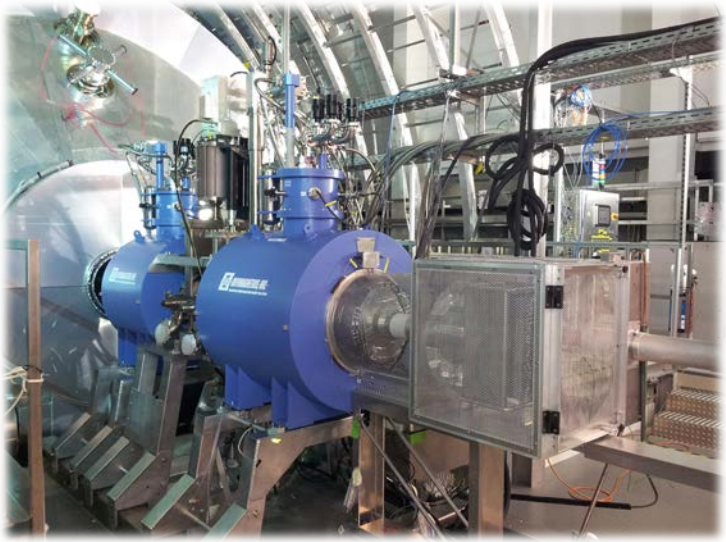

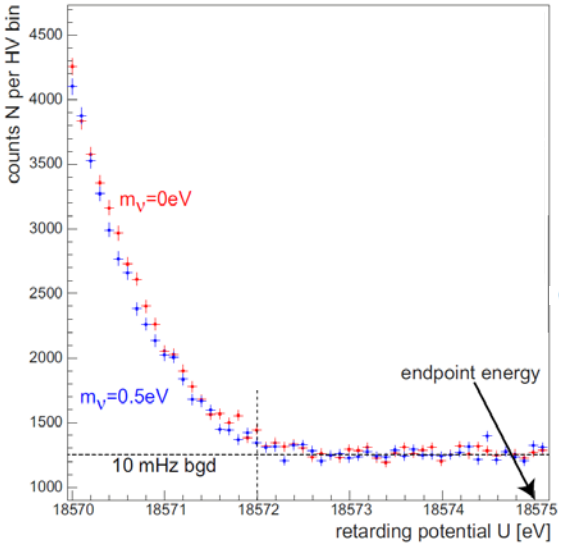

KATRIN Overview

Detector Section

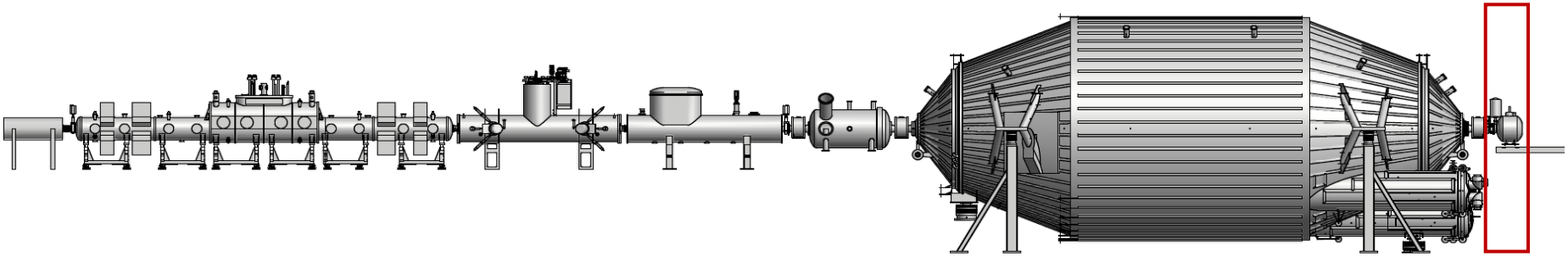

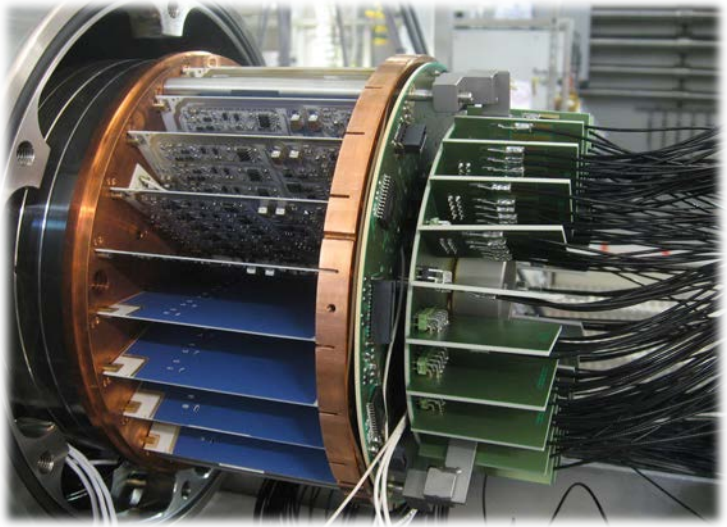

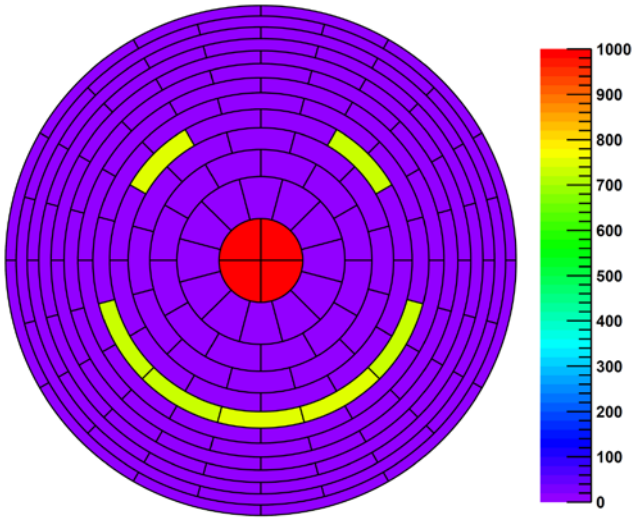

Overview

- Why is a direct neutrino mass measurement so important?
- How does KATRIN work?

- Present: Main Spectrometer Commissioning
- Future: Search for heavy Neutrinos

Commissioning goals

- Adiabatic transmission of electrons
- Low Background Level

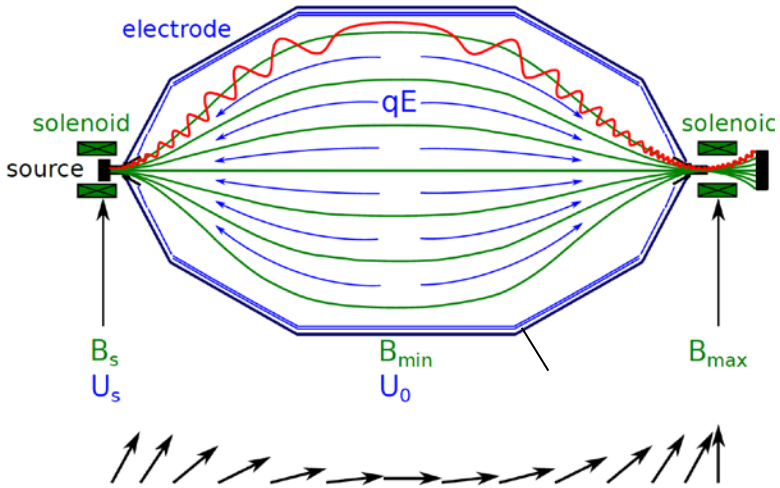

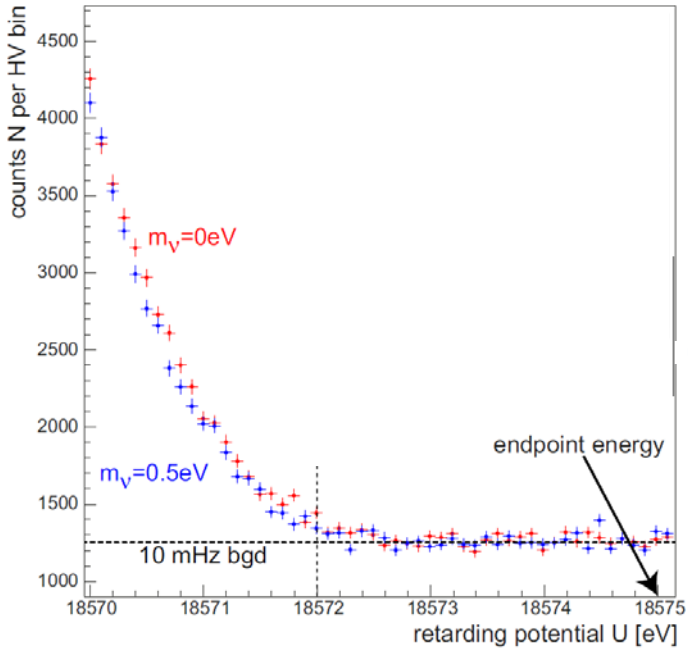

2011: fully commissioned
large Aircoil system

2011: fully commissioned large Aircoil system

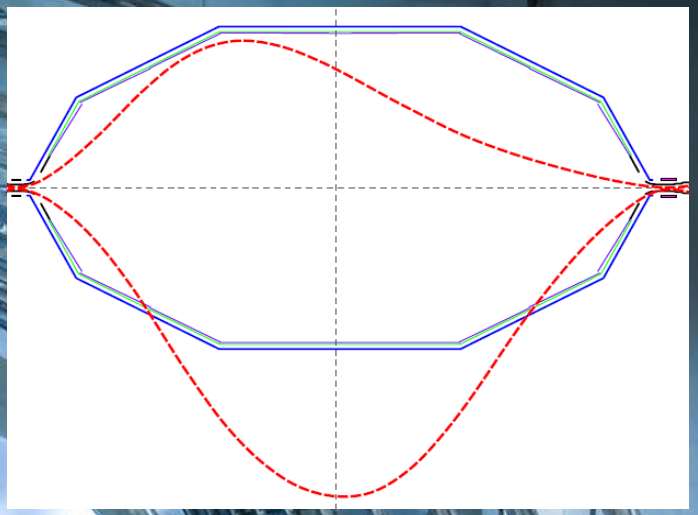

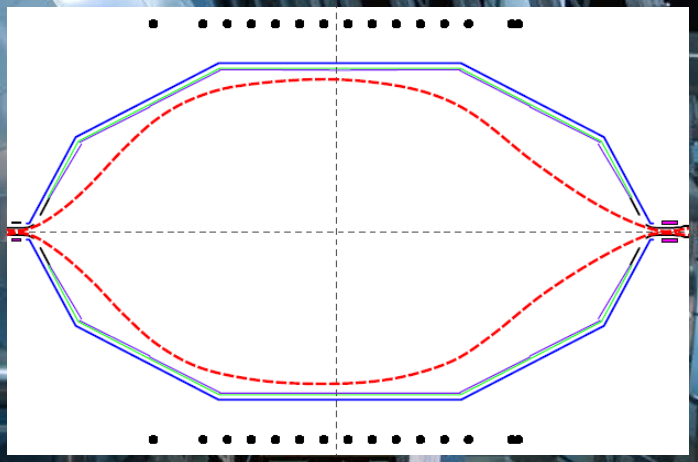

Compensation or Earth magnetic field

Fine Tuning of magnetic field

Shielding of expected ~ 10^5 electrons/s from wall

2011: fully commissioned large Aircoil system

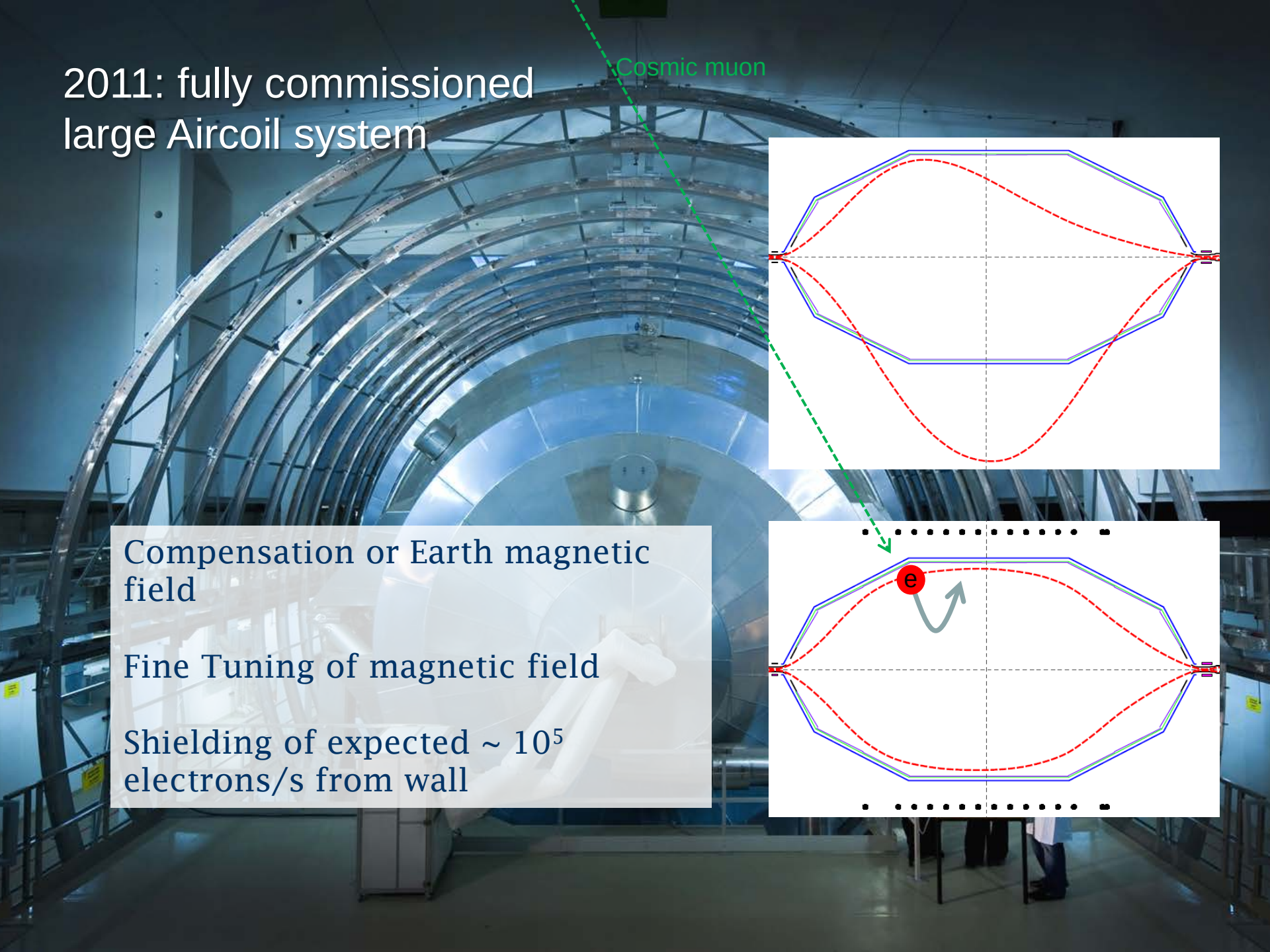

Compensation or Earth magnetic field

Fine Tuning of magnetic field

Shielding of expected ~ 10^5 electrons/s from wall

January 2012:
Inner electrode system
(24.000 wires)
completely mounted
(precision: 200 µm!)

January 2012:
Inner electrode system
(24.000 wires)
completely mounted
(precision: 200 µm!)

Fine Tuning of electric field

Electric shielding

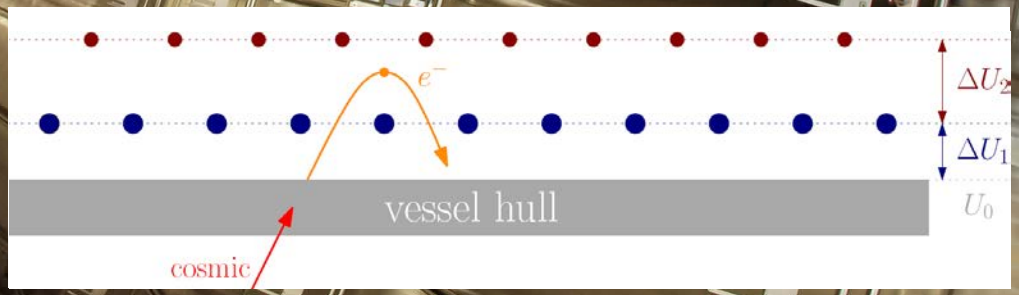

May 8, 2012 14:11
spectrometer pump
ports are closed

Commissioning of main spectrometer

- Successful bake-out of spectrometer vessel at 300° C
- NEG pump activated: pressure at 5×10^{-11} mbar
- Inner electrode system: no broken wire

- First light achieved: May 31st
- First High Voltage: August 13st

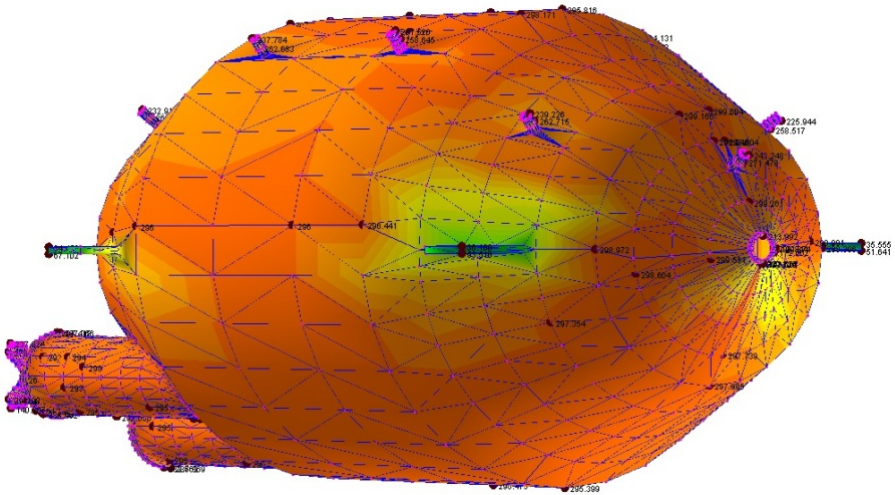

Commissioning of main spectrometer

- Successful bake-out of spectrometer vessel at 300° C
- NEG pump activated: pressure at 5×10^{-11} mbar
- Inner electrode system: no broken wire

- First light achieved: May 31st
- First High Voltage: August 13st

First Transmission Measurement

angular selective egun

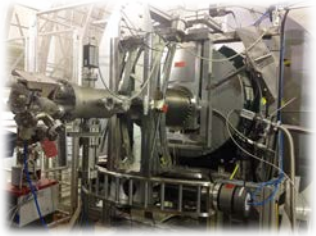

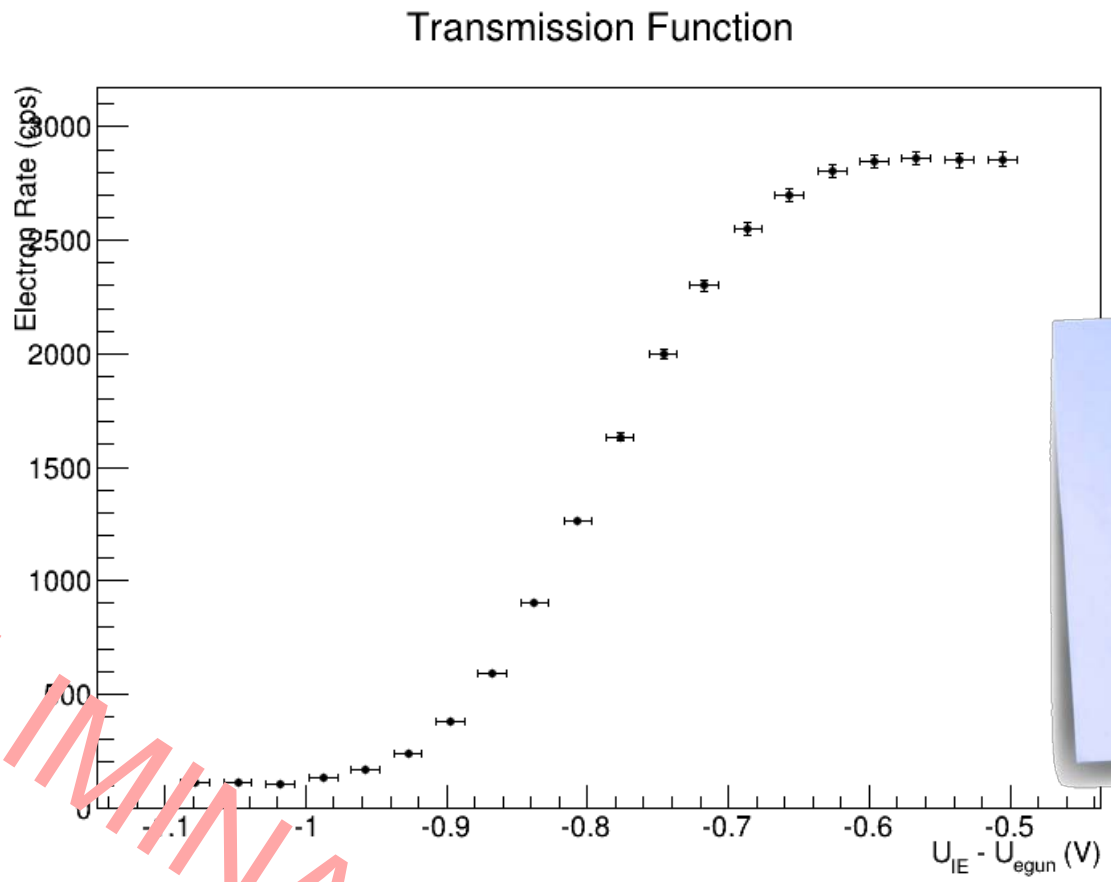

Spectrometer transmits electrons !

PRELIMINARY

First Background Measurement

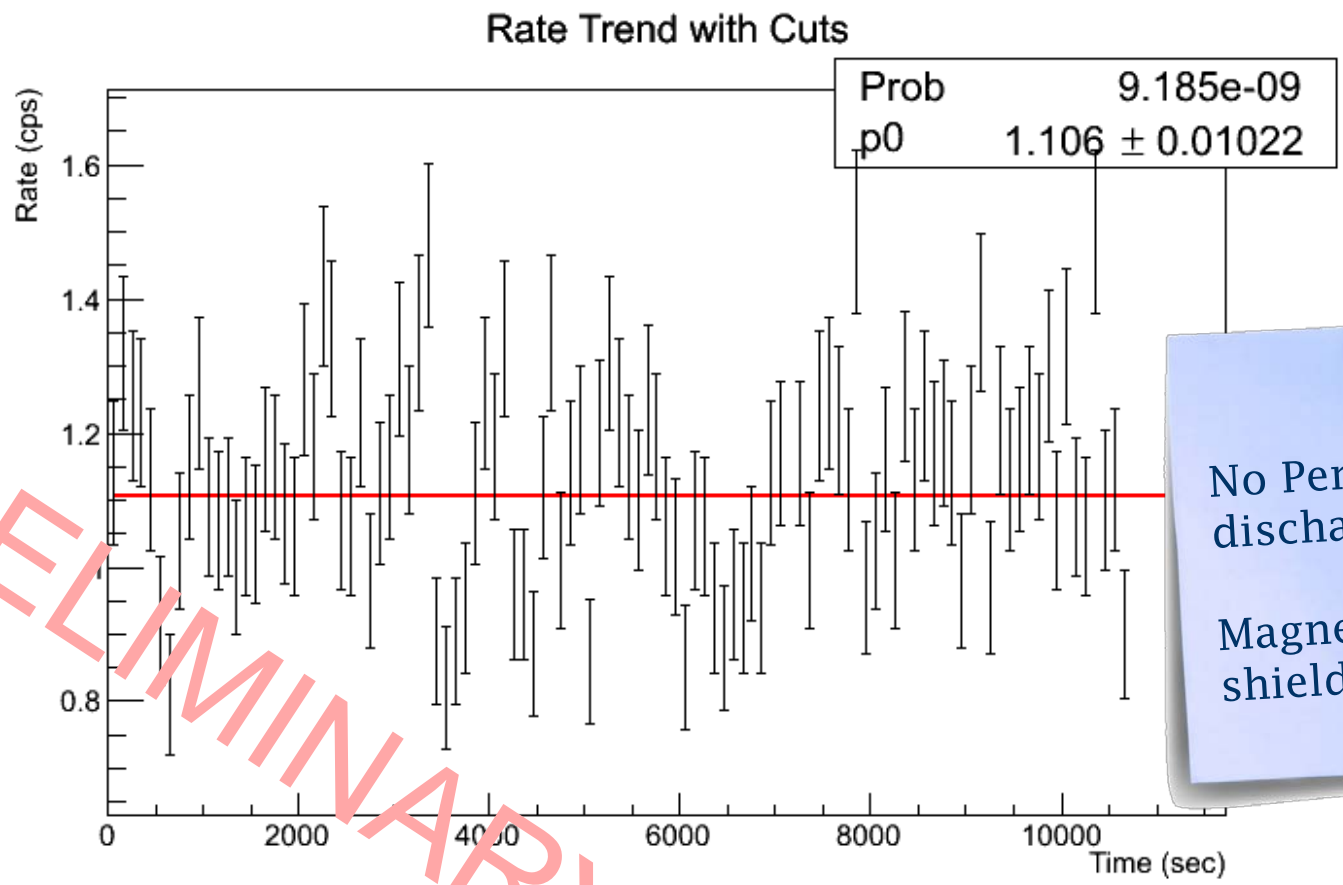

PRELIMINARY

No Penning discharge !!!

Magnetic shielding works !

Radon induced Background

Radon induced Background

Single Radon decay produces hundreds of secondaries

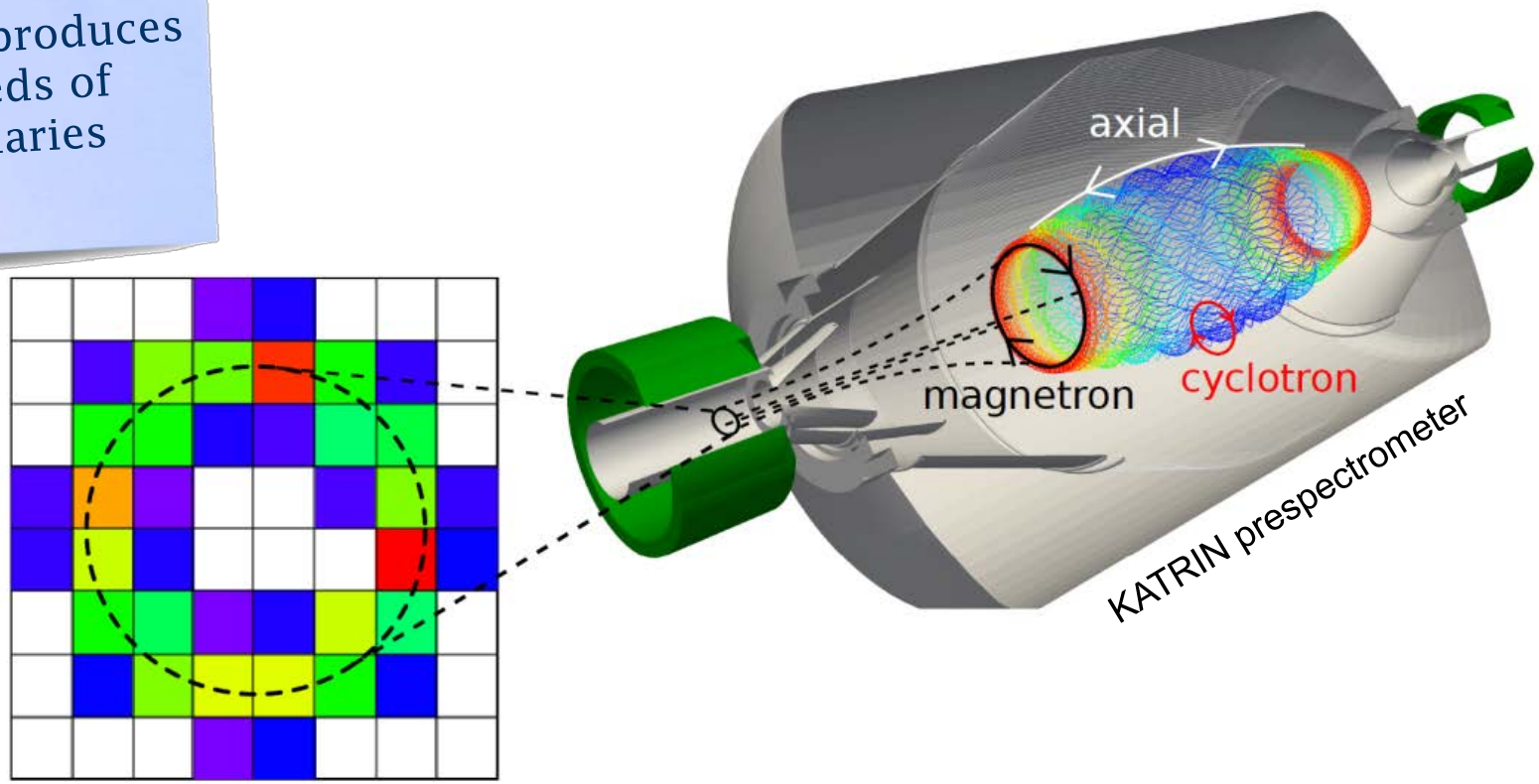

N. Wandkowsky et al., New J. Phys. 15 (2013) 083040
N. Wandkowsky et al., J. Phys. G 40 (2013) 8
S. M. et al., Astropart. Phys. 41 (2013) 52

Passive Reduction Technique

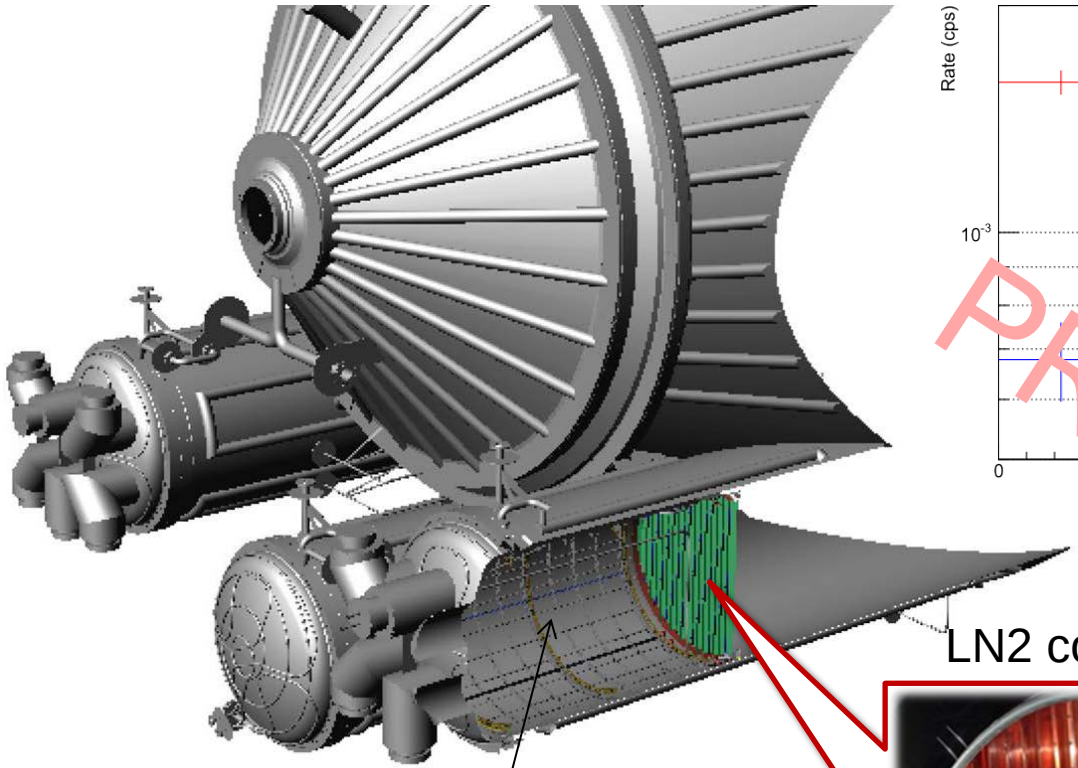

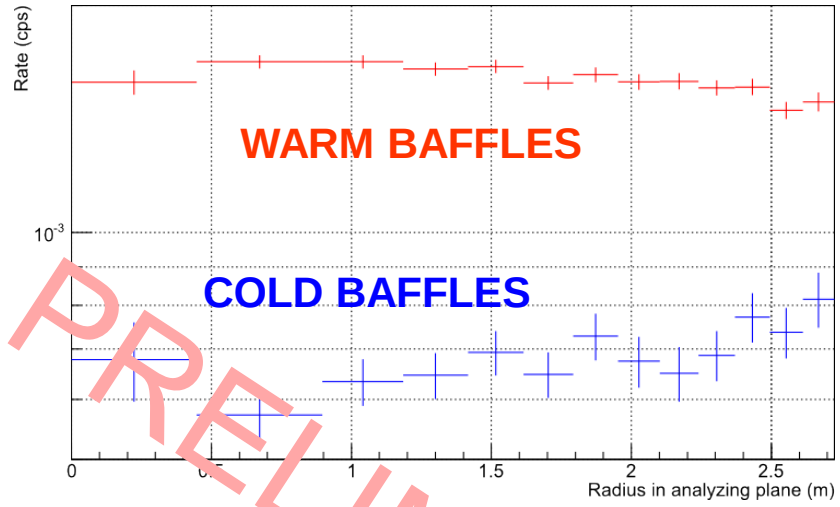

PRELIMINARY

LN2 cooled baffle

Getter pump

Active Background Reduction

→ Fast removal of stored electrons by breaking of trapping condition

Cyclotron Resonance

- All electron energies

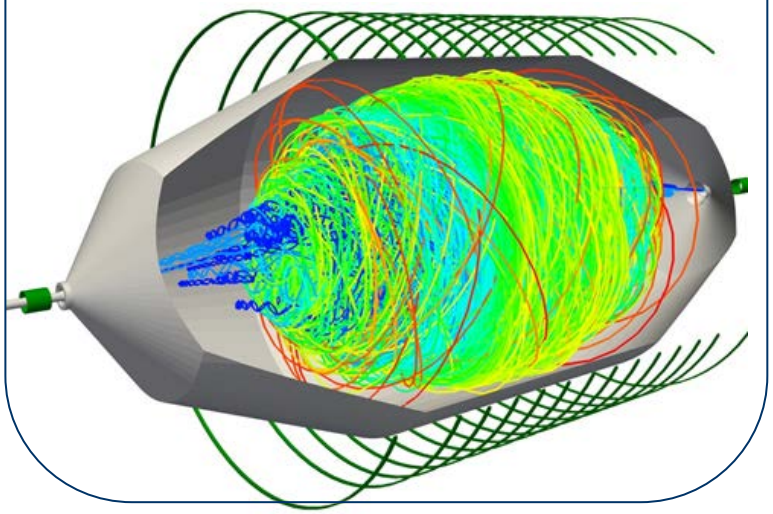

Magnetic Pulse

- High energies

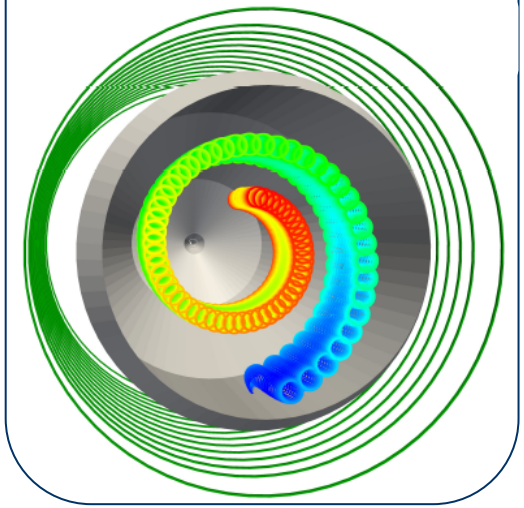

Electric Dipole

- Low energies

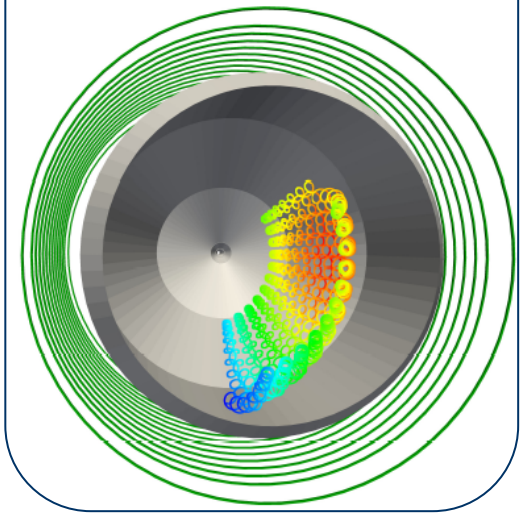

N. Wandkowsky, PhD Thesis
S.M. et al, JINST 05/2012; 7(08):P08025.

Overview

- Why is a direct neutrino mass measurement so important?
- How does KATRIN work?

- Present: Main Spectrometer Commissioning
- Future: Search for heavy Neutrinos

KATRIN and eV sterile neutrinos

- Reactor anomaly, Gallium anomaly
- Short base line accelerator results

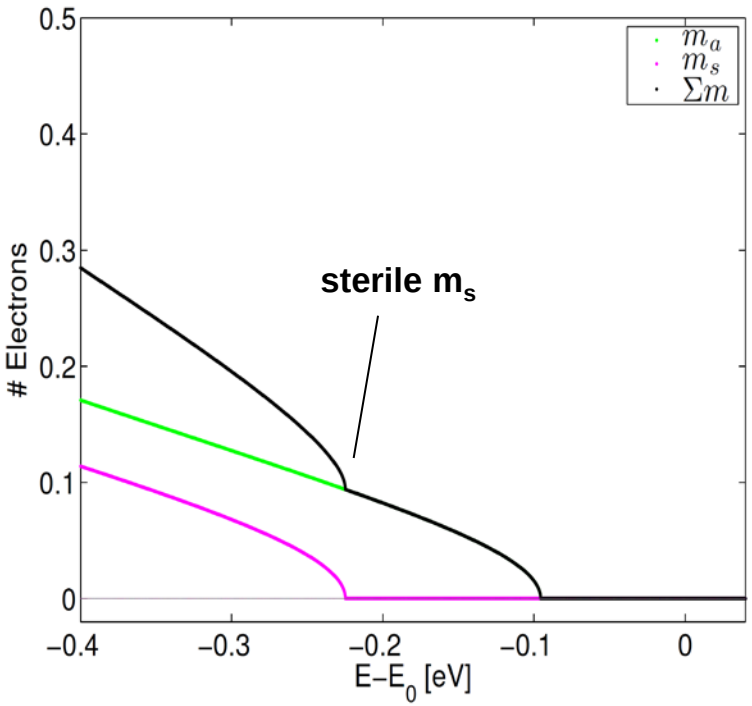

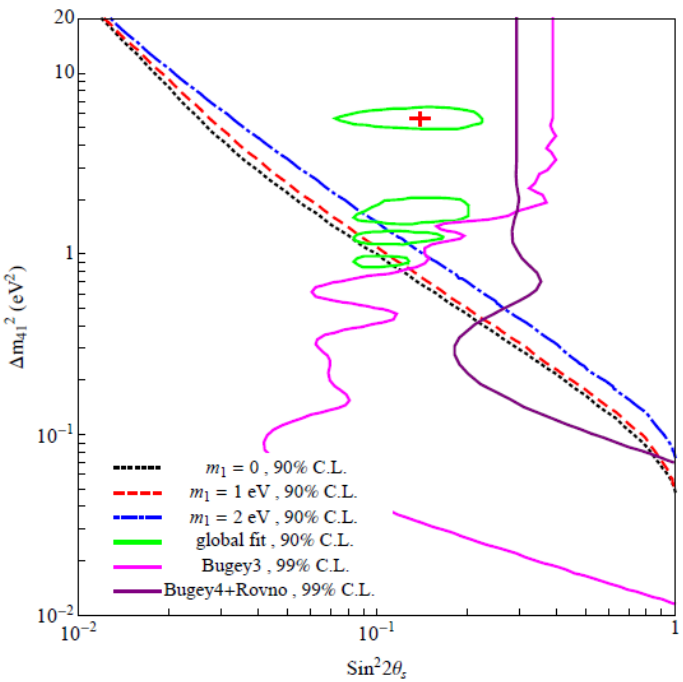

J. A. Formaggio, J. Barret, PLB 706 (2011) 68
A. Sejersen Riis, S. Hannestad, JCAP02 (2011) 011
A. Esmaili, O.L.G. Peres, Phys. Rev. D 85, 117301

KATRIN and keV sterile Neutrinos

”Simple” Λ-CDM models predict:

- many small scale structures (dwarf galaxies)
- cuspy density profiles of galaxies

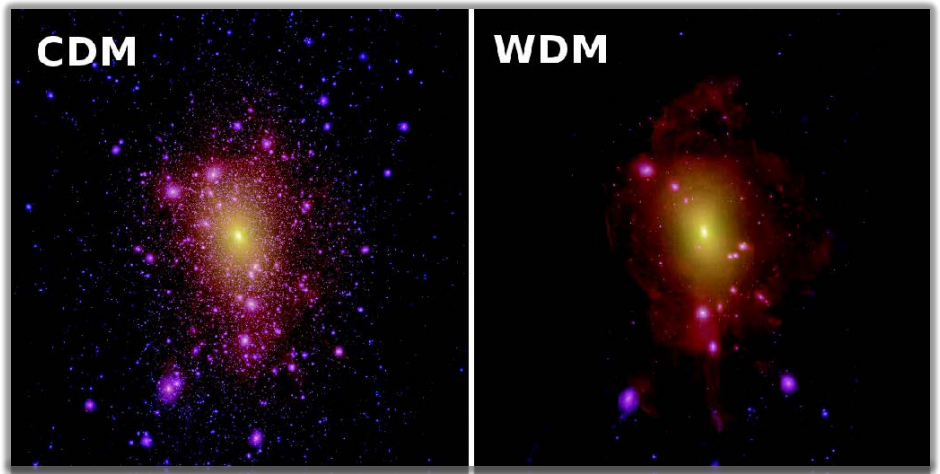

KATRIN and keV Neutrinos

Distinct "kink" in ß-spectrum amplitude ~ $\sin^2\Theta$, position: m_ν

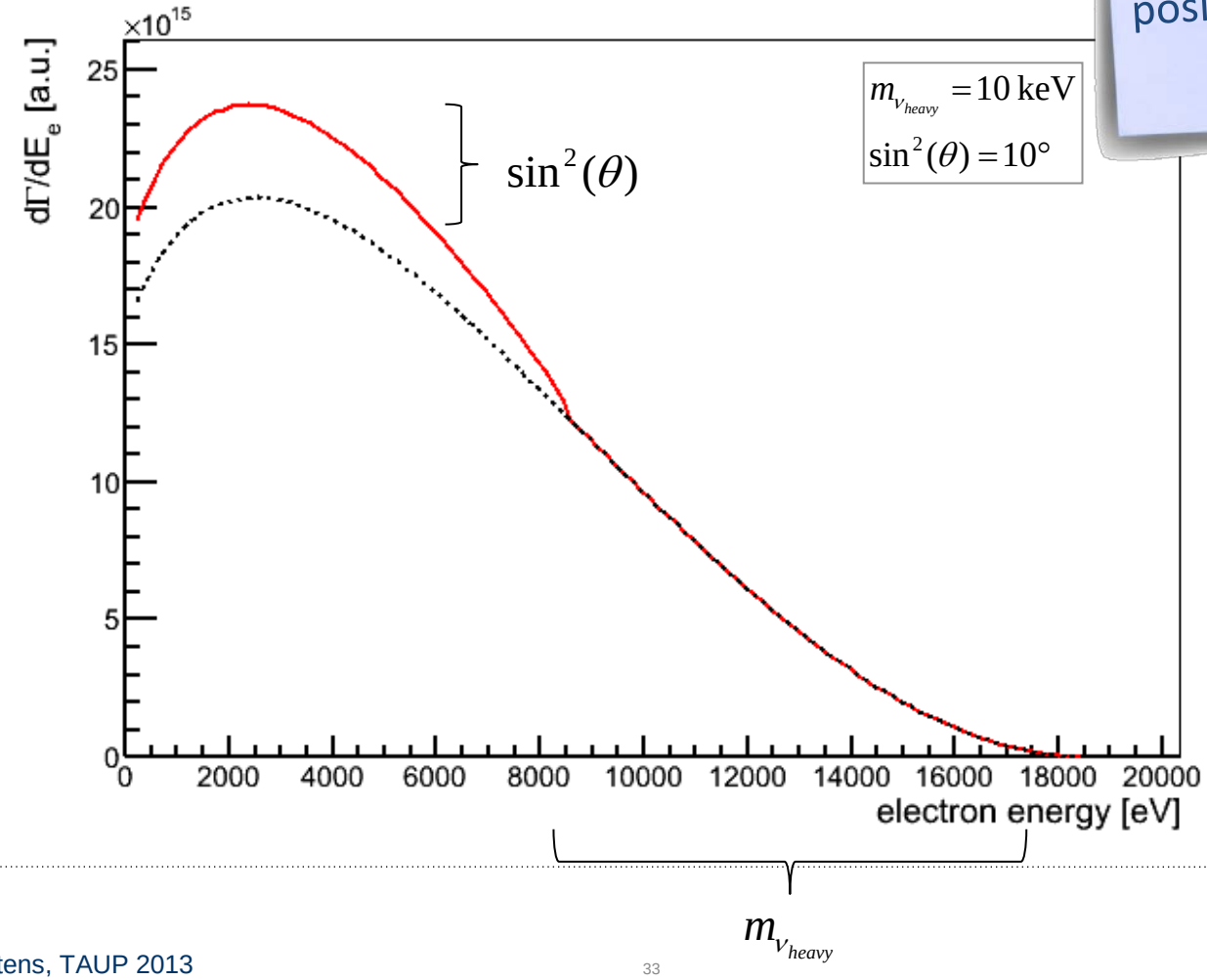

KATRIN and keV Neutrinos

Cosmology:
1keV < m < 50keV
$\sin^2\theta < 10^{-7}$

90% confidence level

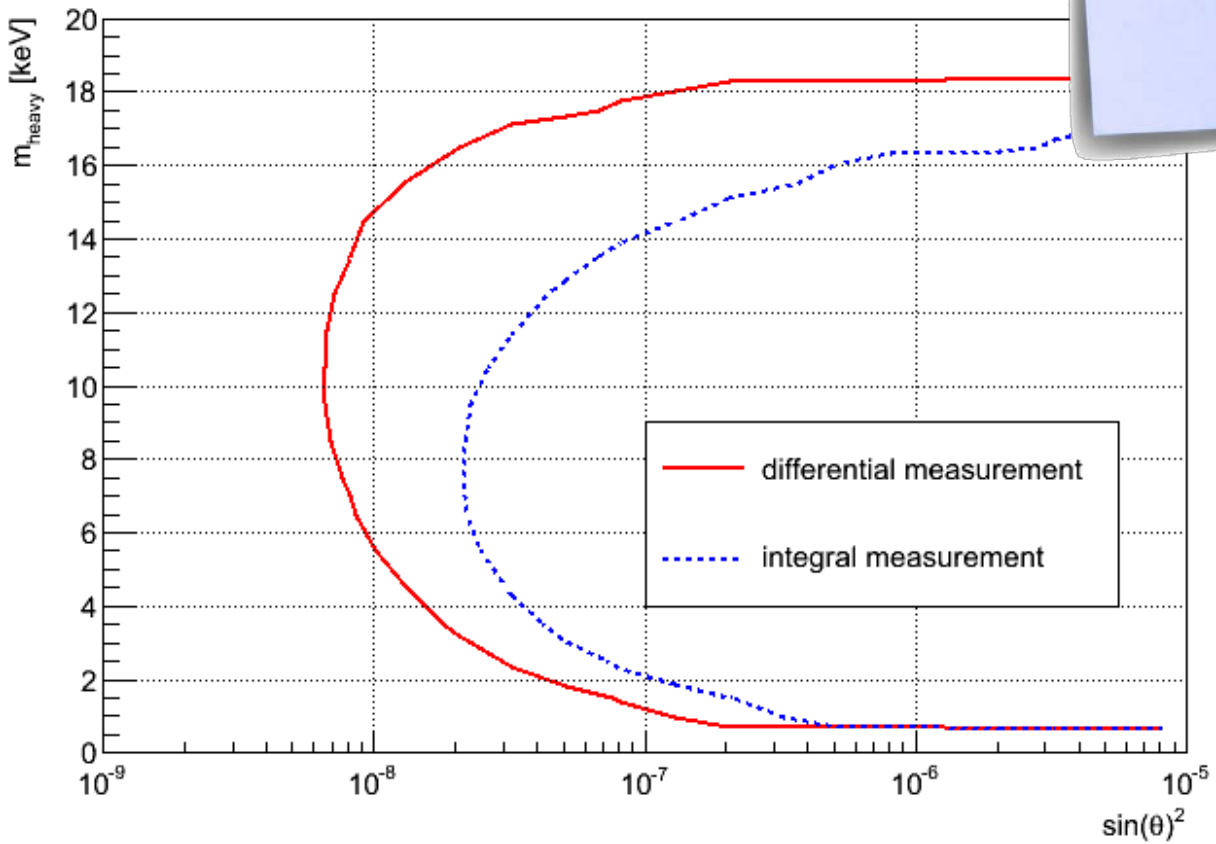

S.M. et al, to be published

Summary

- KATRIN is designed to directly measure the neutrino mass with a sensitivity of 200meV (90%CL) after 3 years of measurement time
- Successful commissioning of main spectrometer
    - Vacuum
    - Transmission
    - Background
- Start of Tritium measurements: fall 2015
- Promising potential for sterile neutrino search

Thank you for your attention

Backup slides

Cosmology limits

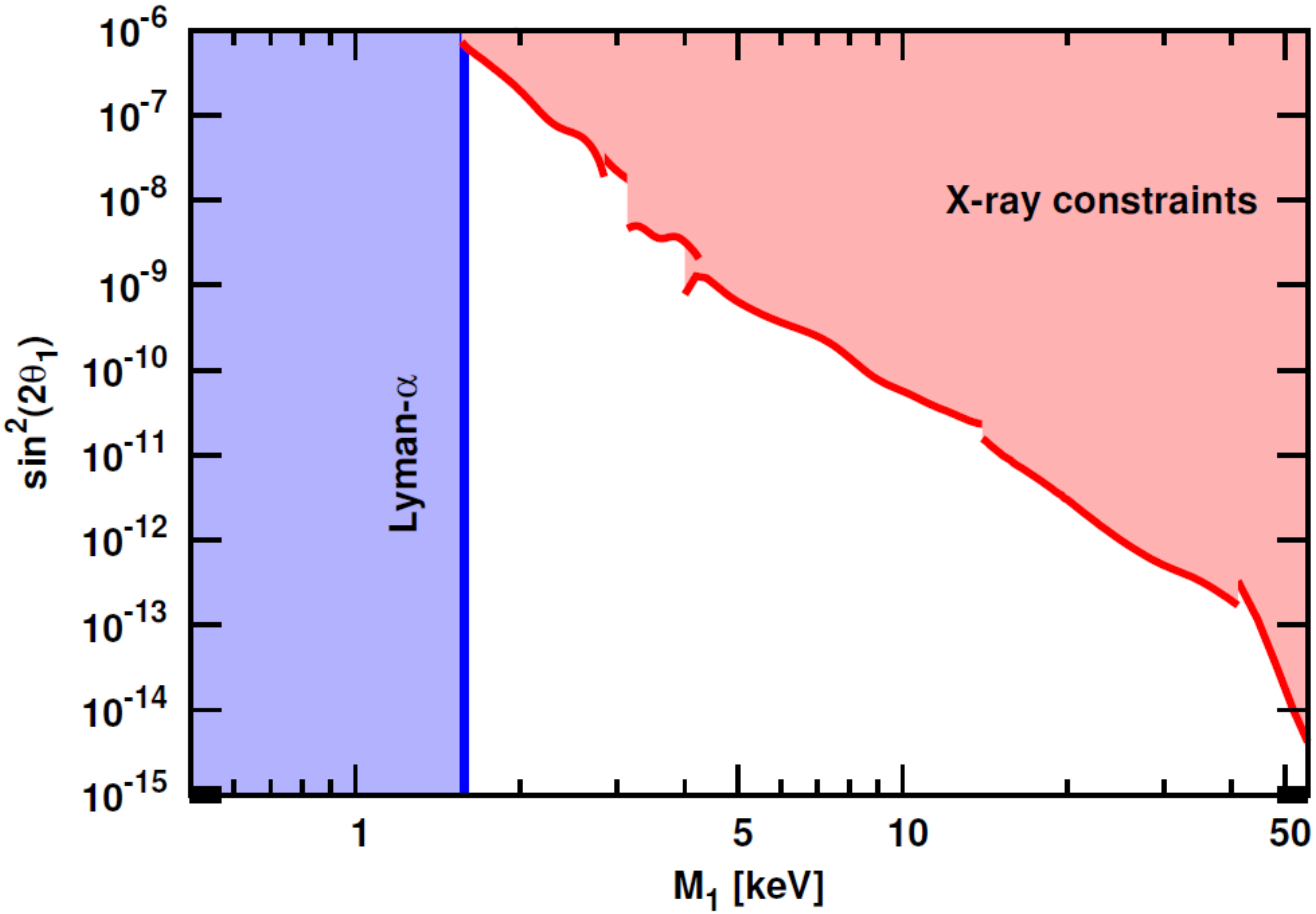

Influence of systematics

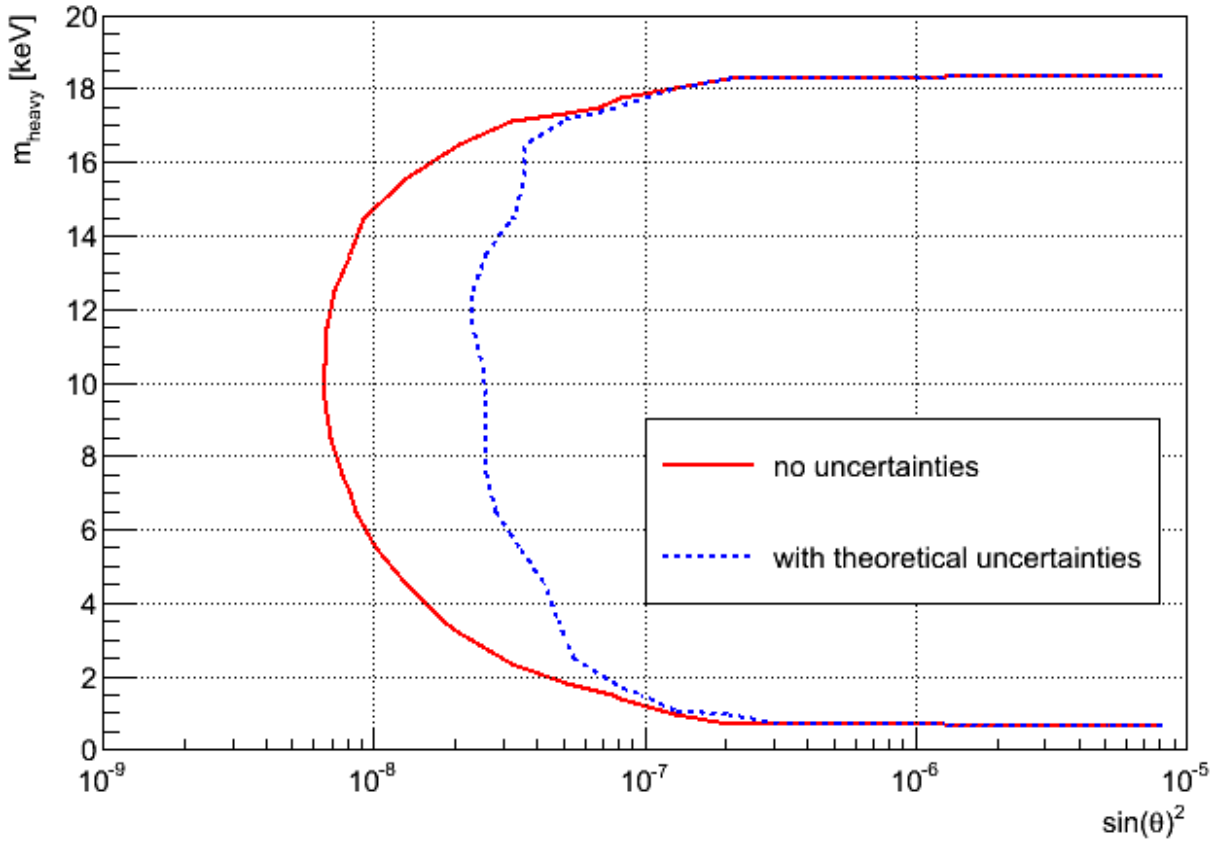

Wavelet Approach

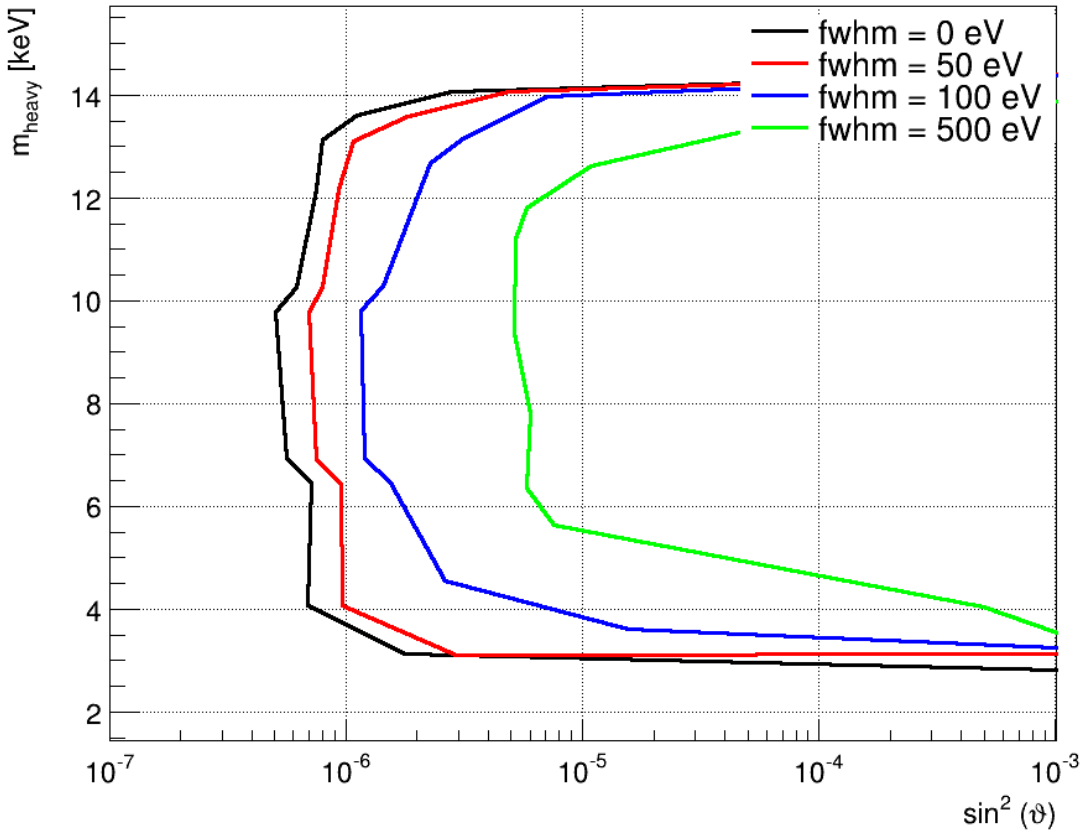

Wavelet Approach

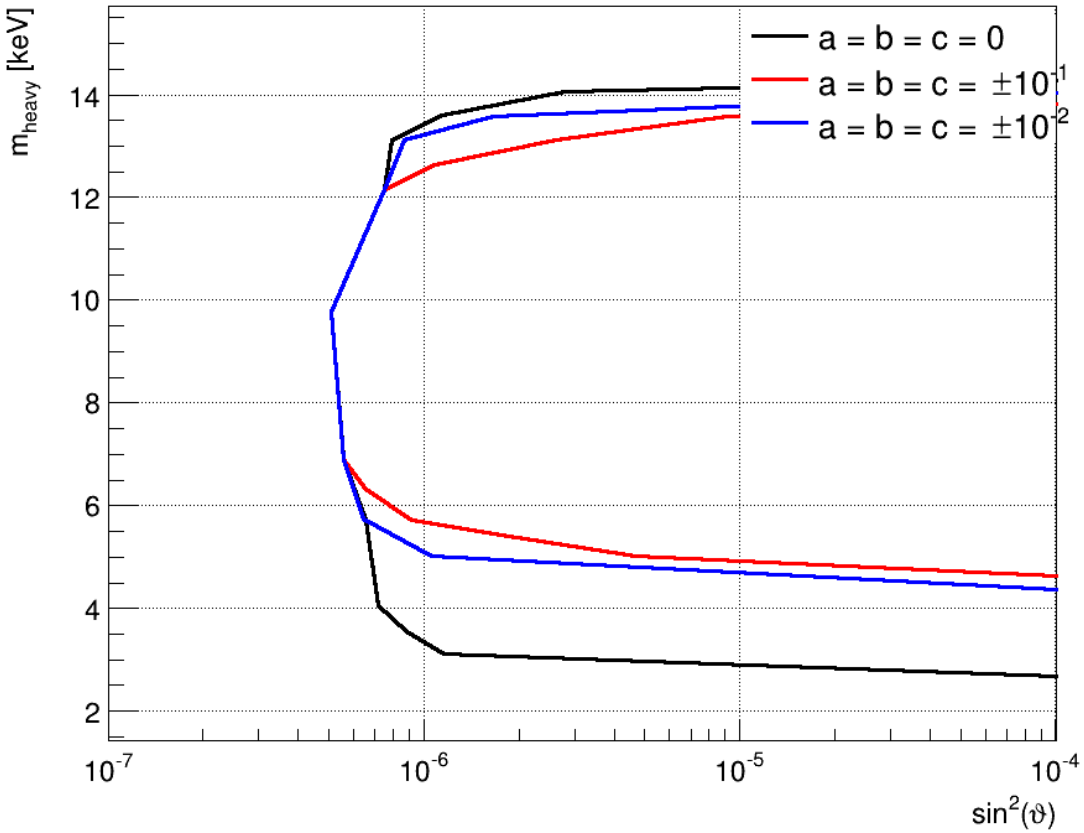

Radon induced Background

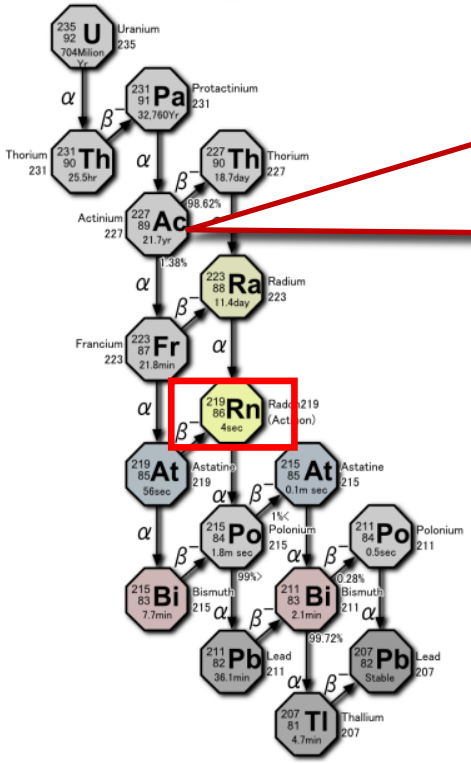

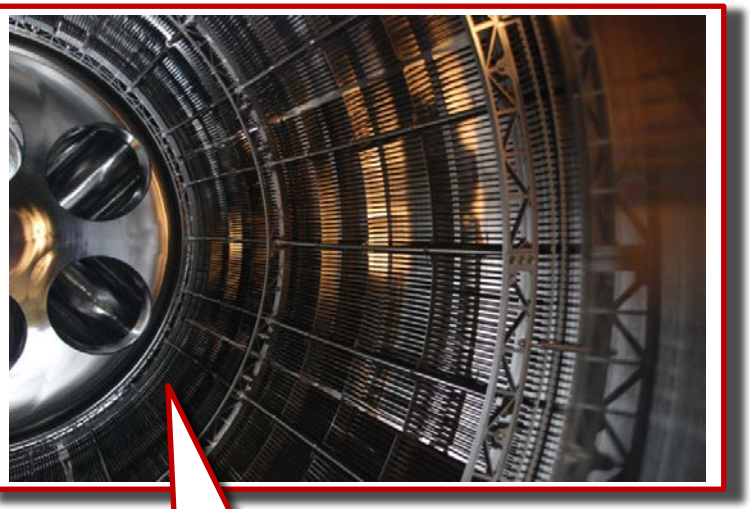

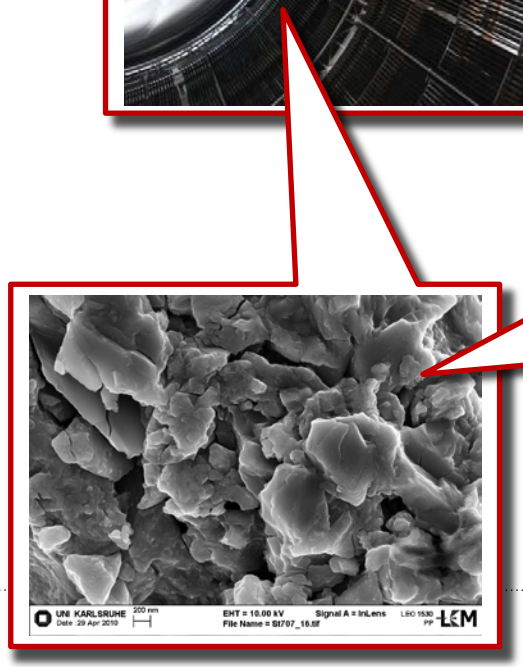

F.M. Fränkle et al., Astropart. Phys. 35 (2011) 128

KATRIN Overview

Transport Section

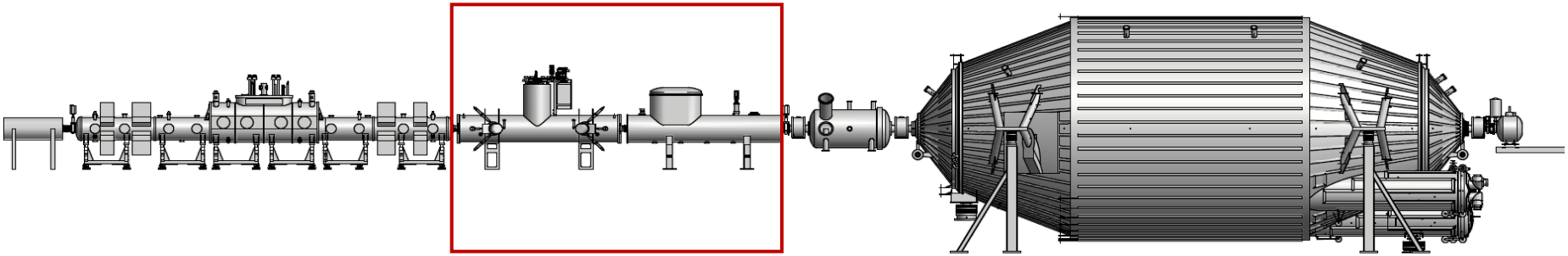

R>10^7 **R>10^7**

Reduction of tritium flow by 14 orders of magnitude

KATRIN Overview

Transport Section

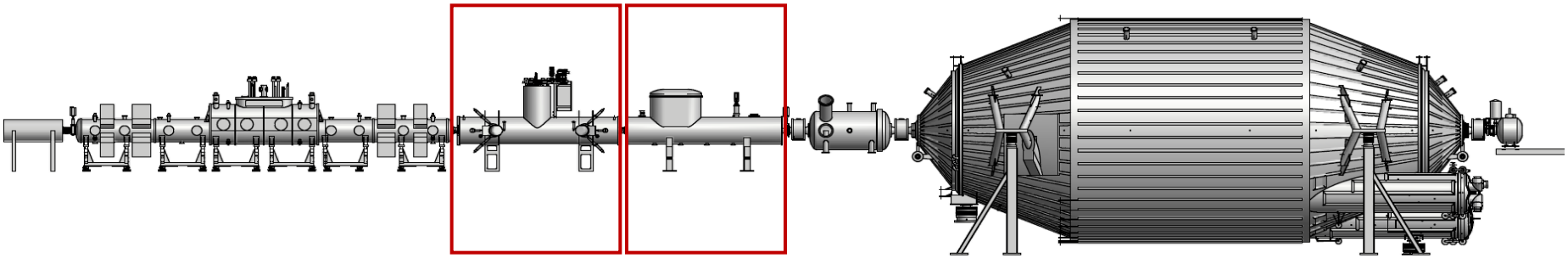

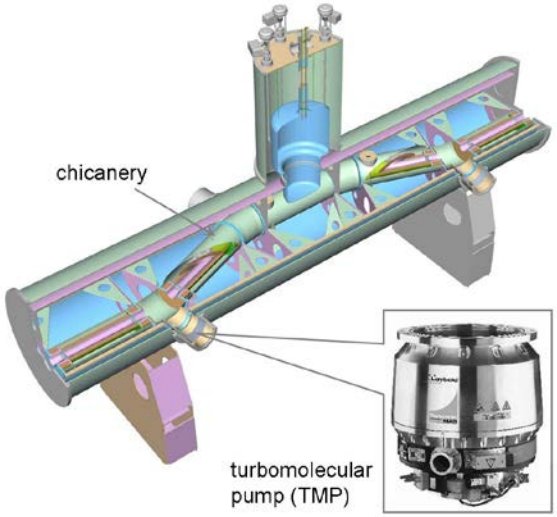

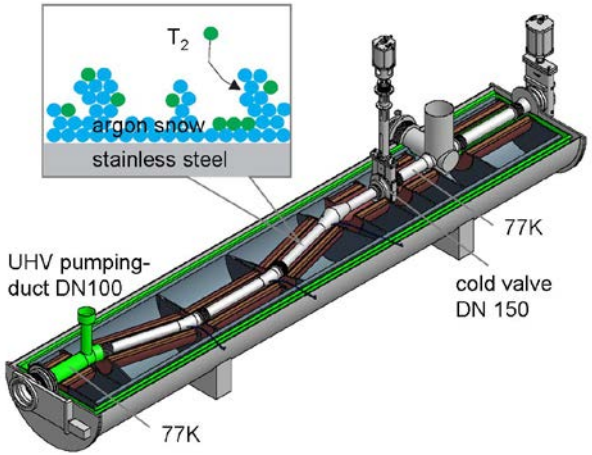

KATRIN Overview

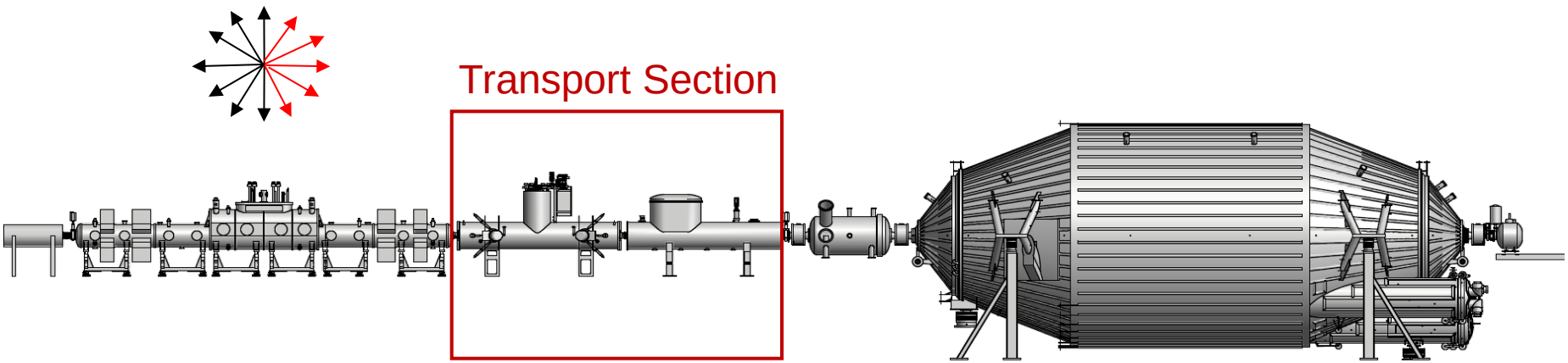

Adiabatic guidance of beta electrons

Total KATRIN system:
37 solenoids

Motivation

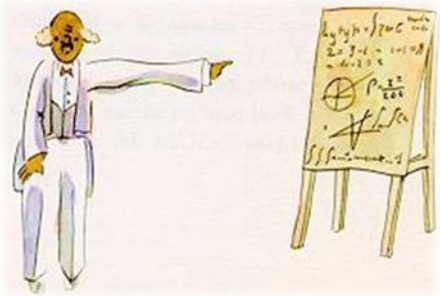

Particle Physics: Mass Creation Mechanism

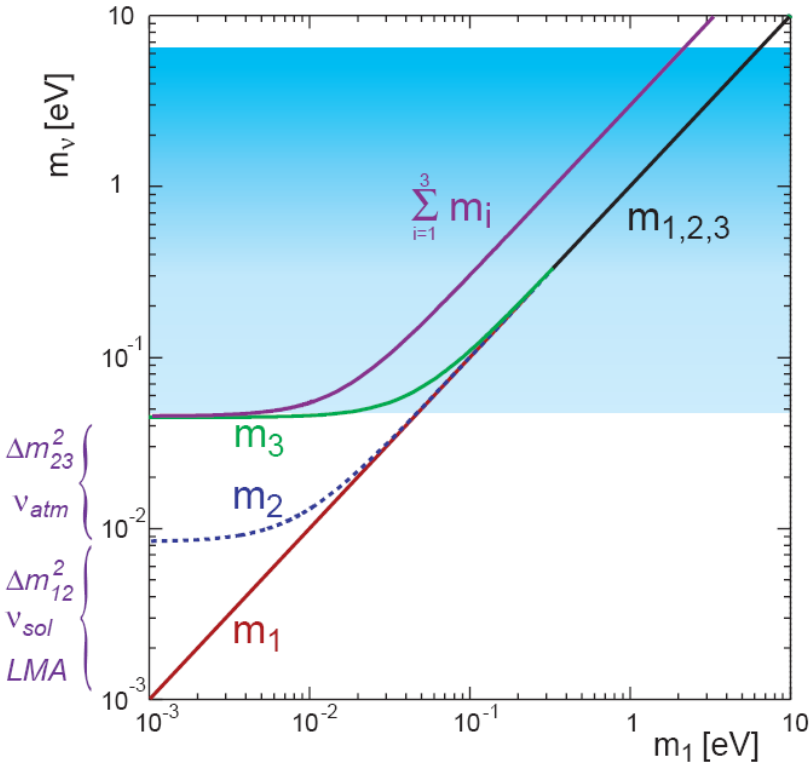

Motivation

Particle Physics: Mass Creation Mechanism

Cosmology: Structure Formation

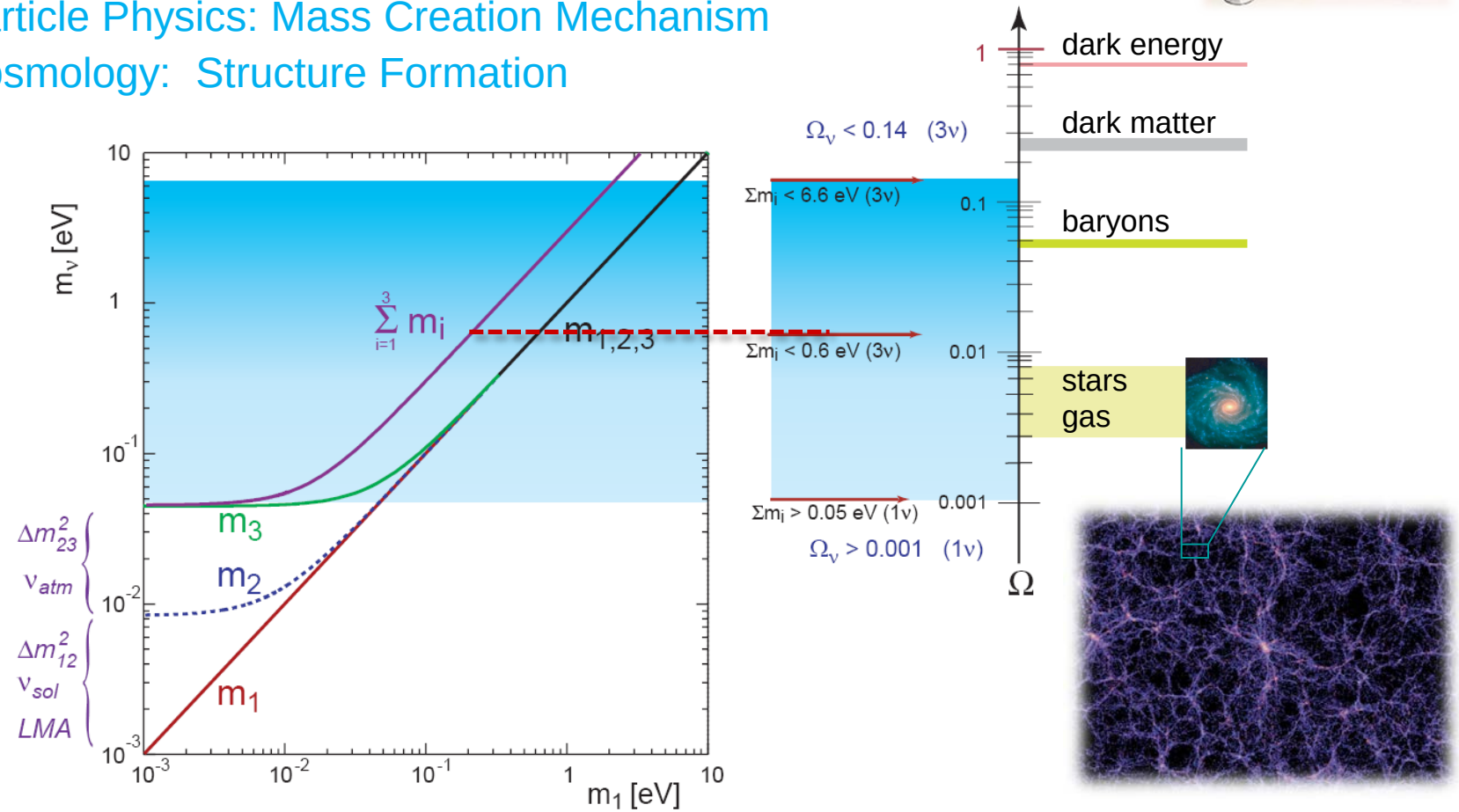

2006: Arrival in Karlsruhe
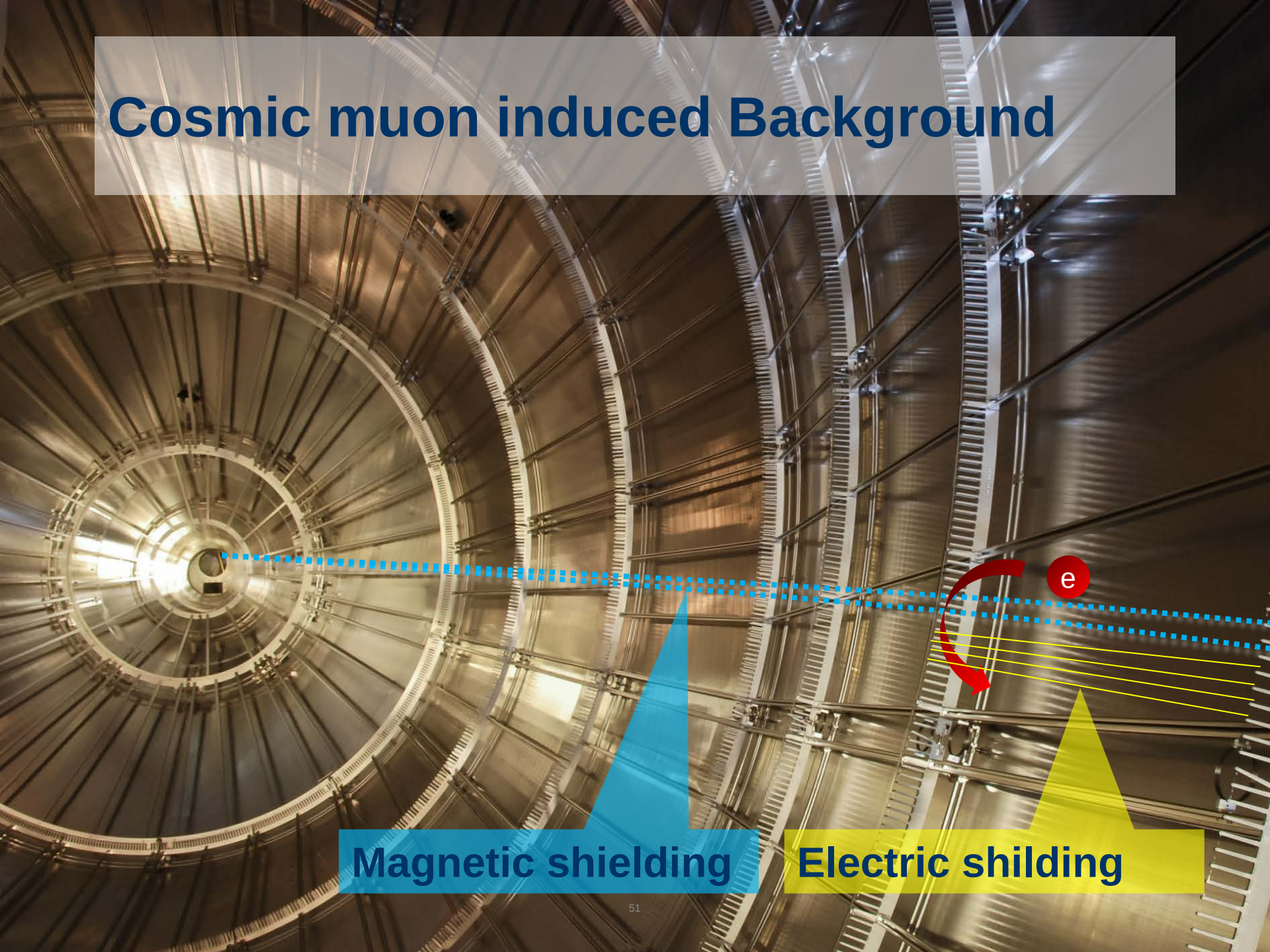
Cosmic muon induced Background