ANDES

AGUA NEGRA DEEP EXPERIMENT SITE

Proposal for a Deep Underground Laboratory
in the Southern Hemisphere

Claudio Dib
Universidad T. Federico Santa Maria
Valparaiso, Chile

TAUP 2013
Asilomar, California, September 8-13, 2013

Proposal:

- To build an Underground Lab in the AGUA NEGRA tunnel.

First **deep underground Lab** in the **Southern Hemisphere.**

Content

- The Agua Negra Tunnel
- ANDES Lab proposal
  - Scientific programme (preliminary)
  - Conceptual design
- Organization (CLES)
- Current status

The Agua Negra Tunnel

The Tunnel Proposal

- Why a Road tunnel: - growing trade of Argentina and Brazil with Asia.
- Shipping through Chilean ports → to cross the Andes.
- The mountain passes suffer severe cuts in winter.

Views of the Agua Negra pass at 4780 m a.s.l.

Tunnel approx. Coordinates: 30.19 South, 69.82 West

La Serena, Chile

San Juan,
Argentina

Cerro Tololo
Int. Am. Observatory

Tunnel features

- Altitude: 3600 m asl (Chile), 4085 m asl (Argentina), slope ~ 3%
- Two parallel tunnels, 14 km long, 60 m separation
- 12 m diameter (two lanes each), connecting galleries every 500 m.
- Deepest point: 1750 m depth.
- Forced ventilation (14.5 MW).

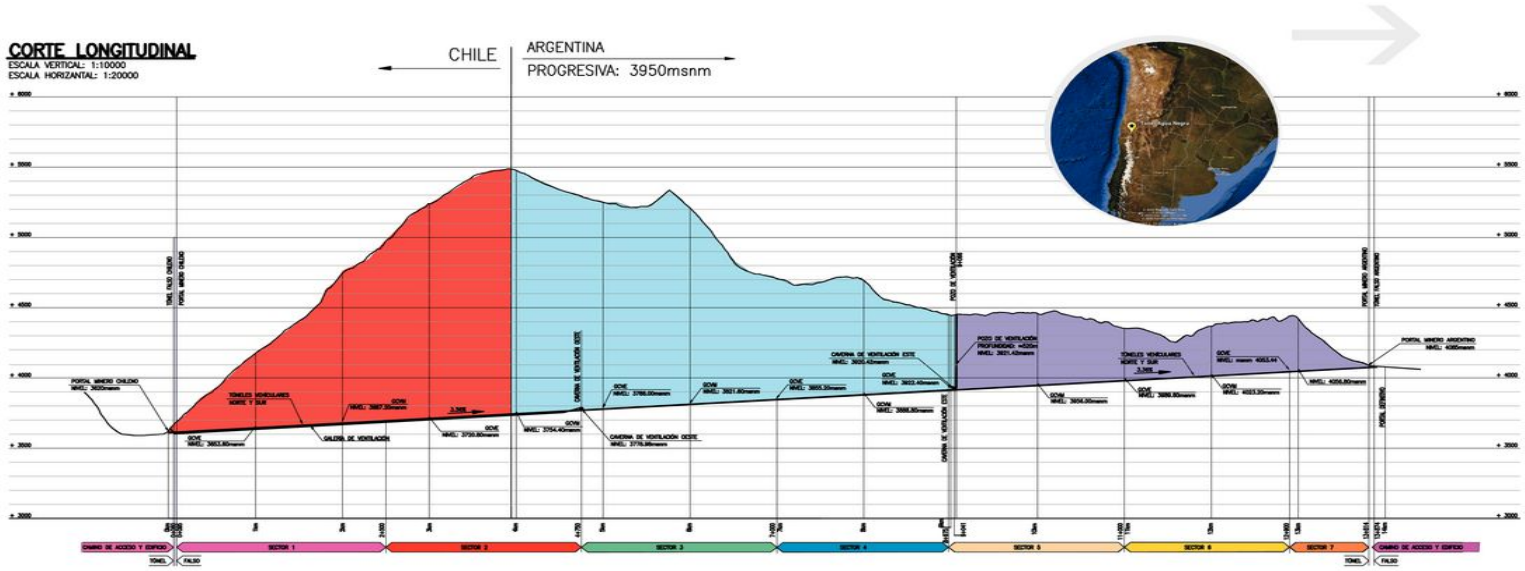

Rock studies

Main rock: - Andesite
variations: - rhyolite
- basalt
- dacite
- trachyte

9 samples from 8 perforations up to 600 m deep

(Bq/kg):	Andesite	Basalt	Rhyolite 1	Rhyolite 2	Canfranc
U-238	9.2 ± 0.9	2.6 ± 0.5	14.7 ± 2.0	11.5 ± 1.3	4.5 -- 30
Th-232	5.2 ± 0.5	0.94 ± 0.09	4.5 ± 0.4	4.8 ± 0.5	8.5 -- 76
K-40	47 ± 3	50 ± 3	57 ± 3	52 ± 3	37 -- 880

Thanks to Laboratorio de Activación Neutrónica (Bariloche, Argentina)

Tunnel proposal updates

- Pre-feasibility study done in 2005, feasibility in 2008.
- 2009, October: presidents of Argentina and Chile signed a Bi-National Integration Treaty, including San Juan-Coquimbo.
- 2010, August: MERCOCUR Meeting in San Juan: “strong support for Agua Negra Tunnel”, with President of Brazil pushing for tunnel tender.
- 2011, December: Argentina Congress voted a 800 MU$D guarantee fund for the Agua Negra tunnel.
- 2012, March: presidents of Argentina and Chile signed international agreement asking for the tender of the tunnel.
- 2013, June: Call for tender.
- 2014 – 2021: Construction

The ANDES Laboratory proposal

ANDES: **A**gua **N**egra **D**eep **E**xperiment **S**ite

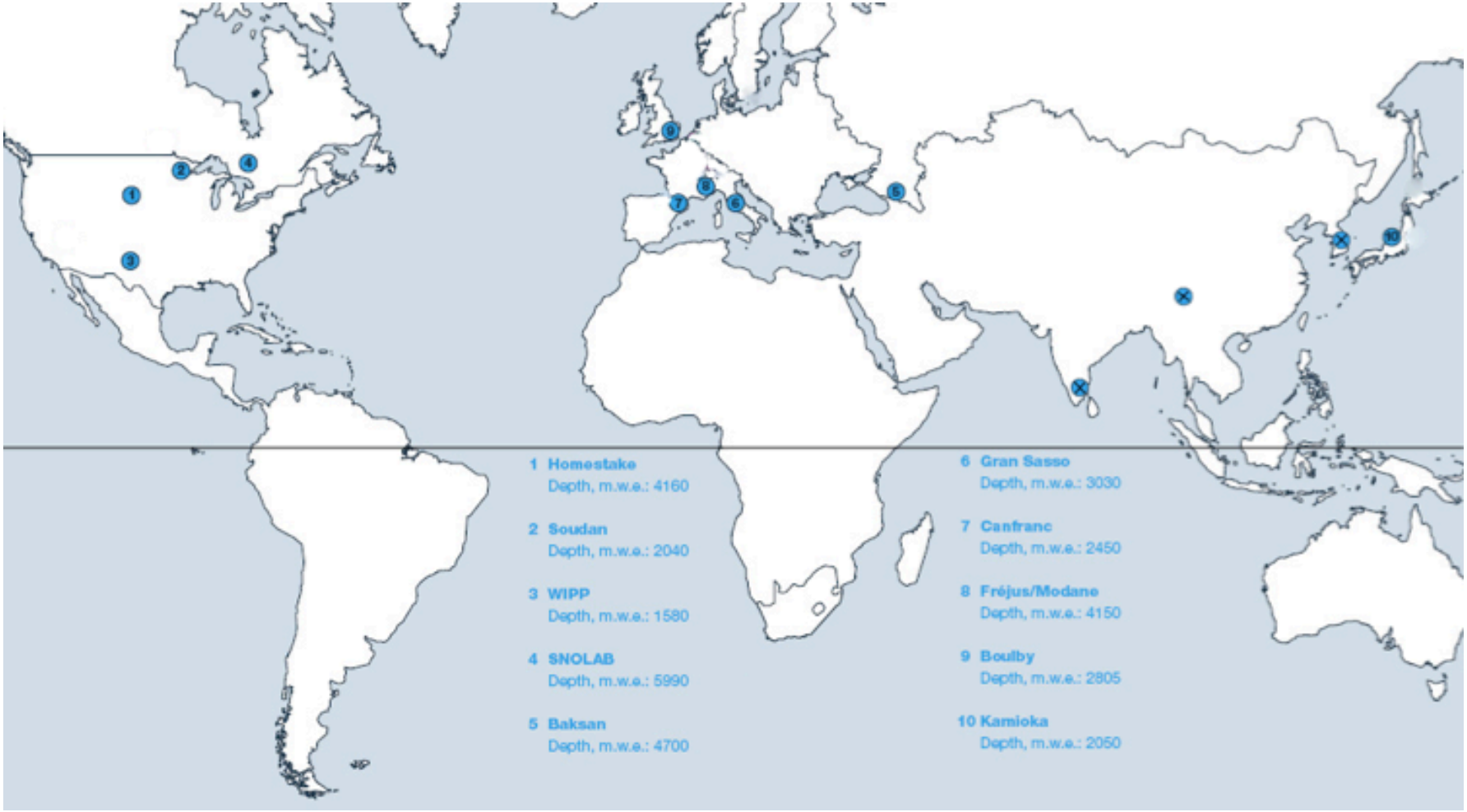

So far, all deep U. Labs are in the Northern Hemisphere.

Flux at sea level ~ 100 /m^2 s ANDES: ~ 4500 mwe; aten: 10^{-7}

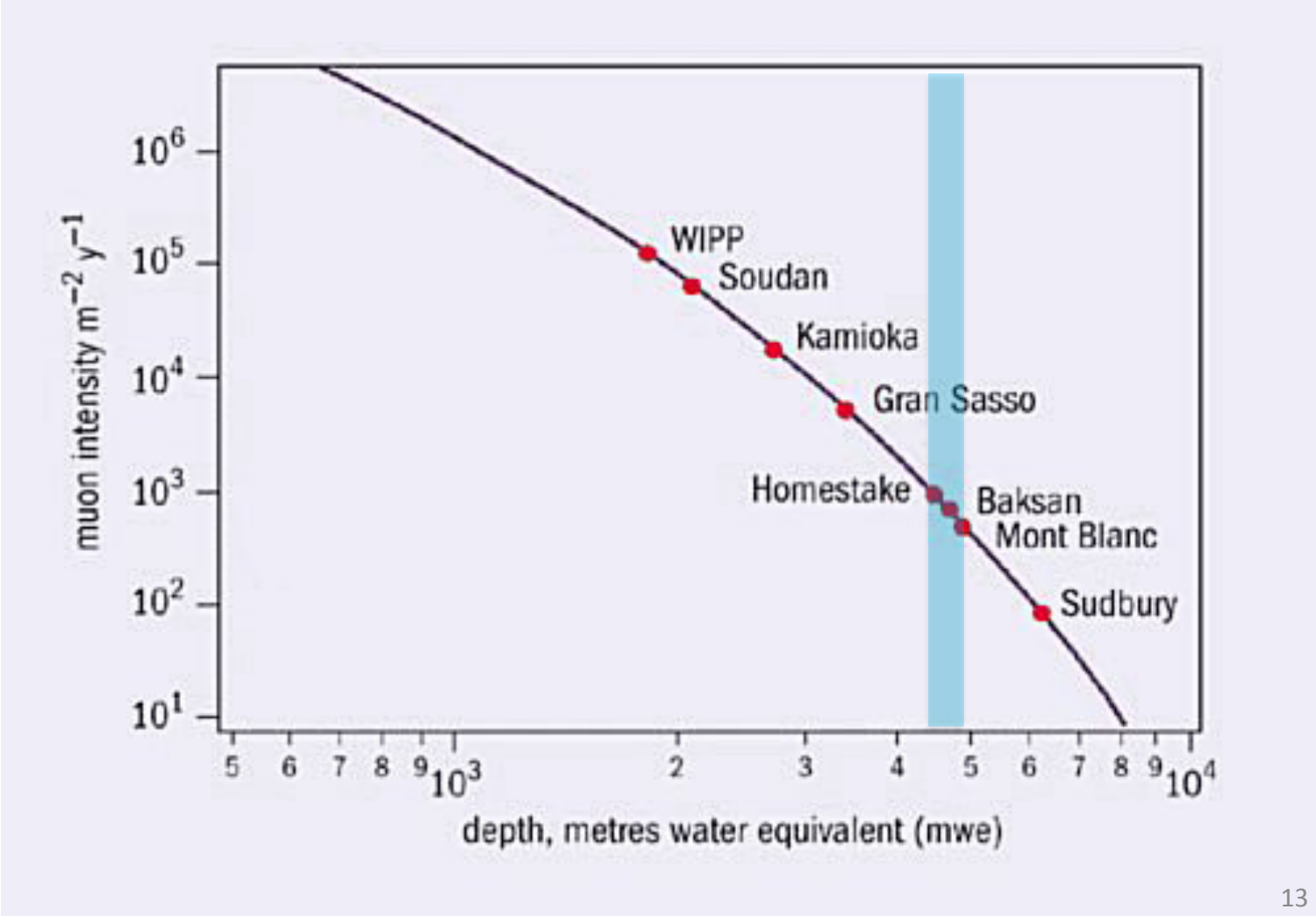

The ANDES Lab proposal

- Build a U-Lab at the deepest point in tunnel (~ 1750 m deep)
- 3.5 km to Chile entrance, 10 km to Argentina exit

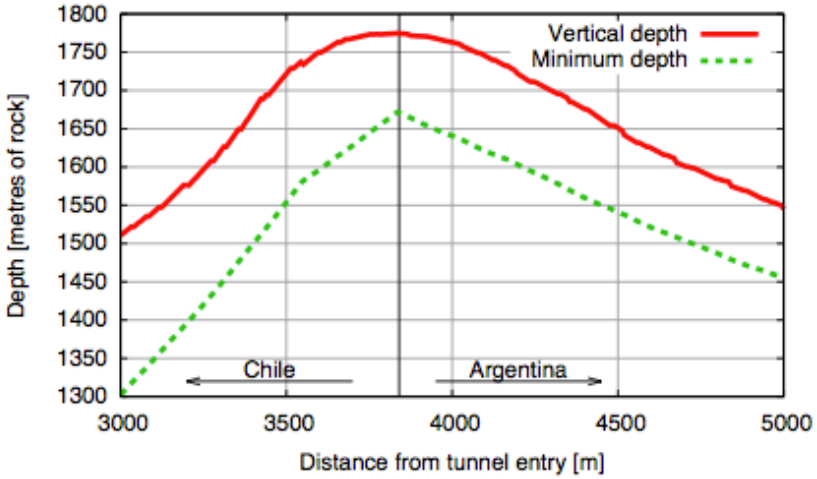

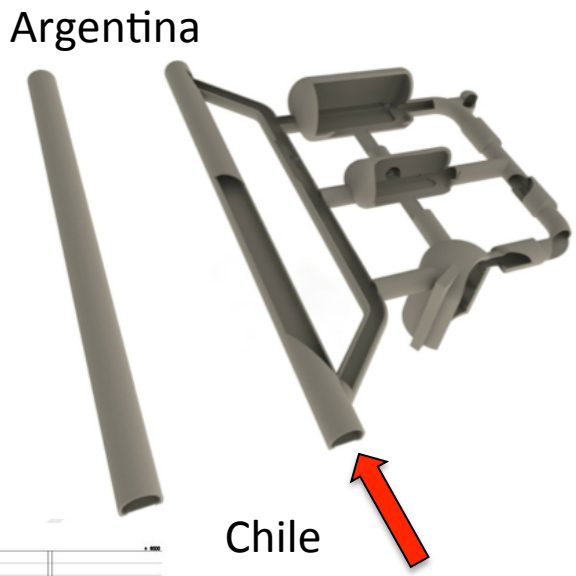

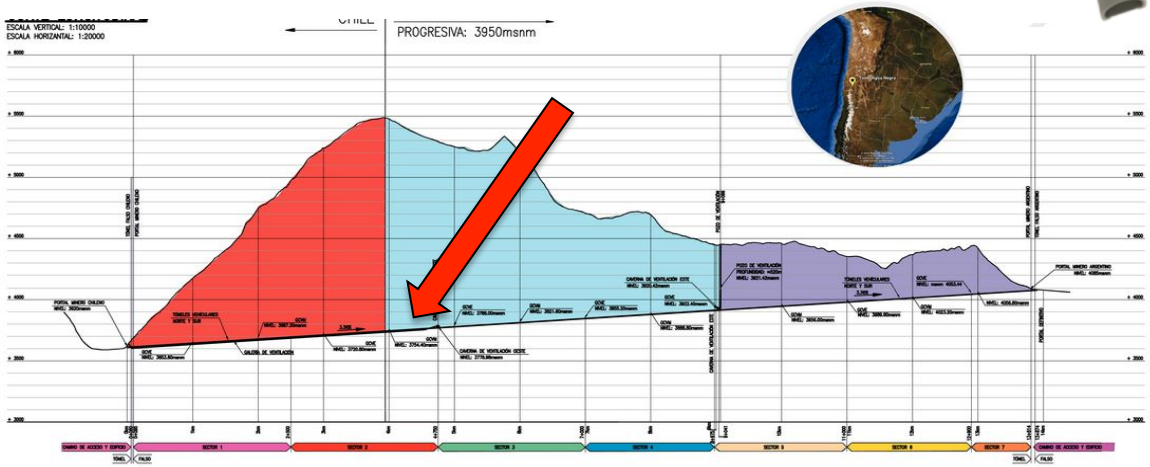

What makes ANDES special?

- Third deepest Lab in the world.

- First in the southern hemisphere
  - Opposite weather-induced modulations

- Low reactor neutrino bkg
  - Embalse: 2.1 GWth, 560 km
  - Atucha: 1.2 GWth, 1080 km
  - Atucha II: 2.1 GWth

- Geoactive Region
  - Geophysics experiments

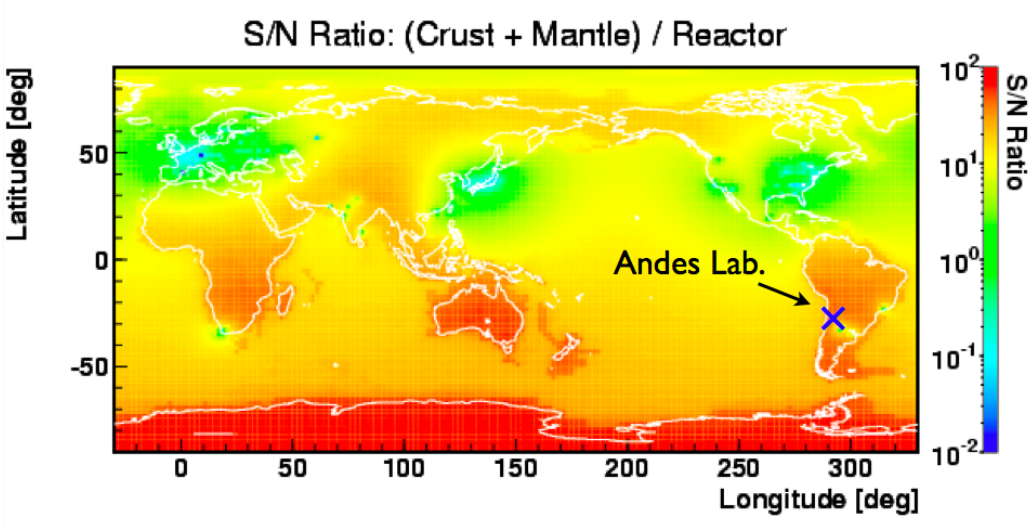

ANDES scientific programme
(preliminary)

ANDES initial Scientific Programme

- Neutrino physics:
  - host double beta decay experiments
  - large neutrino detector (similar to KamLAND / Borexino)
    - focused on low energies (solar / SN / geoneutrinos)

- Dark Matter
  - modulation measurements
  - new technologies

- Geophysics
  - link Chile-Argentina seismograph networks
- Biology
- Low radiation measurements
- Nuclear Astrophysics (low energy beams)

Proposed **Large Latinamerican Neutrino Detector**

- 3 – 10 kton of liq. Scintillator
- arXiv:1027.5454
- Main topic for next ANDES workshop.

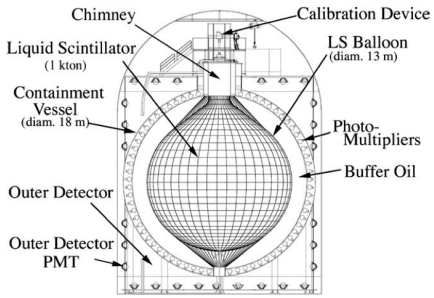

Double Beta experiments:

Manifested interest:

- NEXT
- SuperNEMO modules: ~ 100 kg ^{82}Se

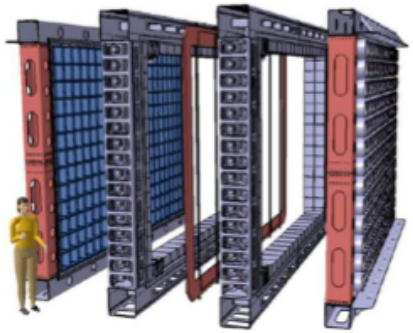

Dark Matter:

- Host a south copy of a DM experiment with modulation signal.
- Host a next gen. DM experiment.

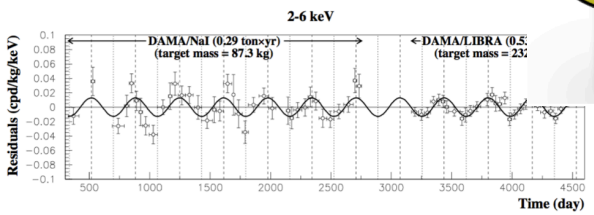

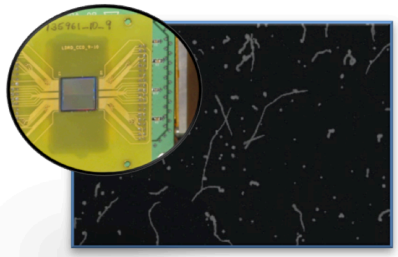

Nuclear Astrophysics:

- proposal for a 300 keV high intensity ion beam (similar to LUNA)
- Study nuclear reactions of stars

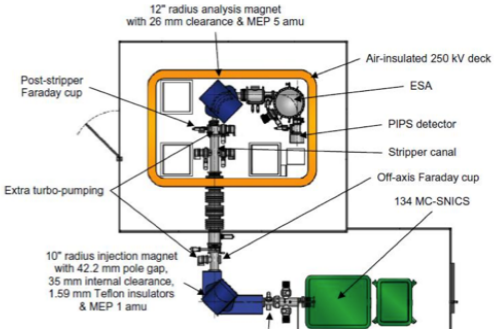

ANDES Conceptual Design

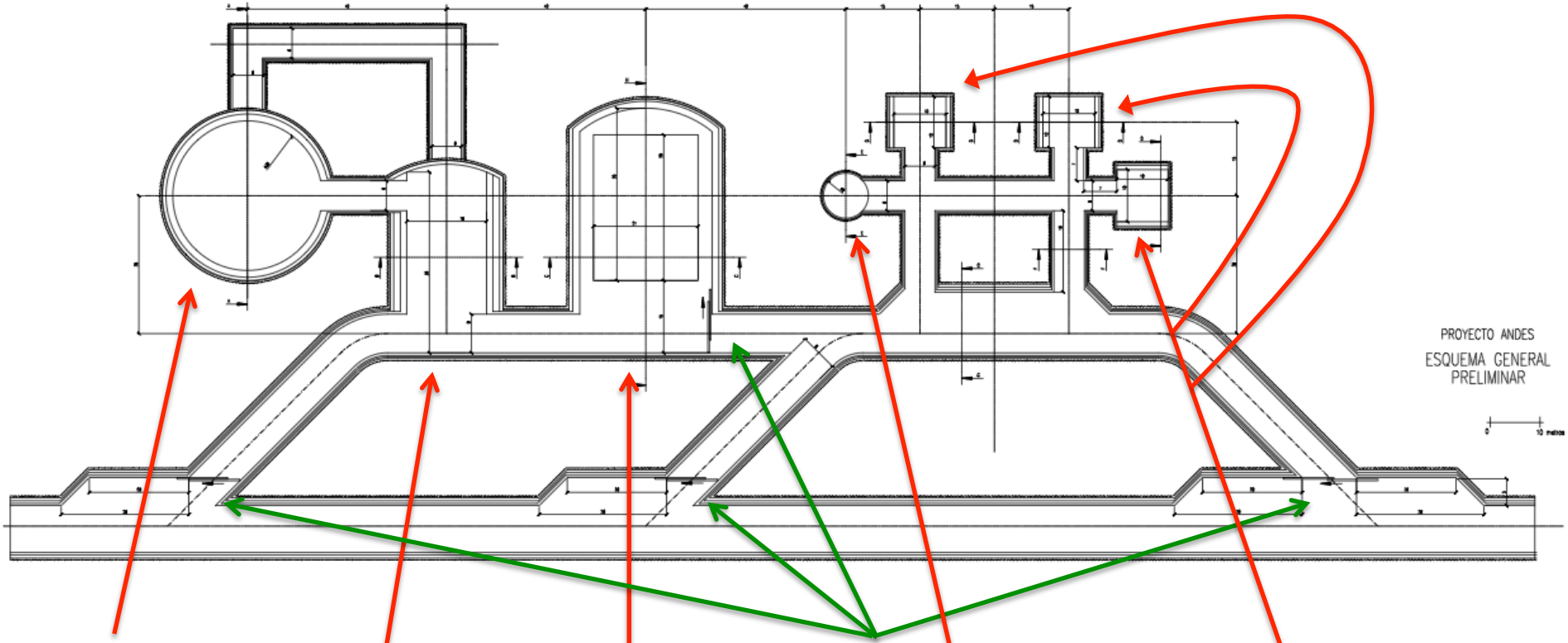

Large pit
30 m diam
42 m deep

Access:
at 30 m high
and
at bottom

Service hall
40 m long
16 m wide
15 m high
Oval section

Main hall
50 m long
21 m wide
23 m high
Oval section

Gates

Ultra low radiation pit
9 m diam
15 m deep

Access:
At 10 m high
and bottom

3 secondary caverns
10 x 10 x 10 m

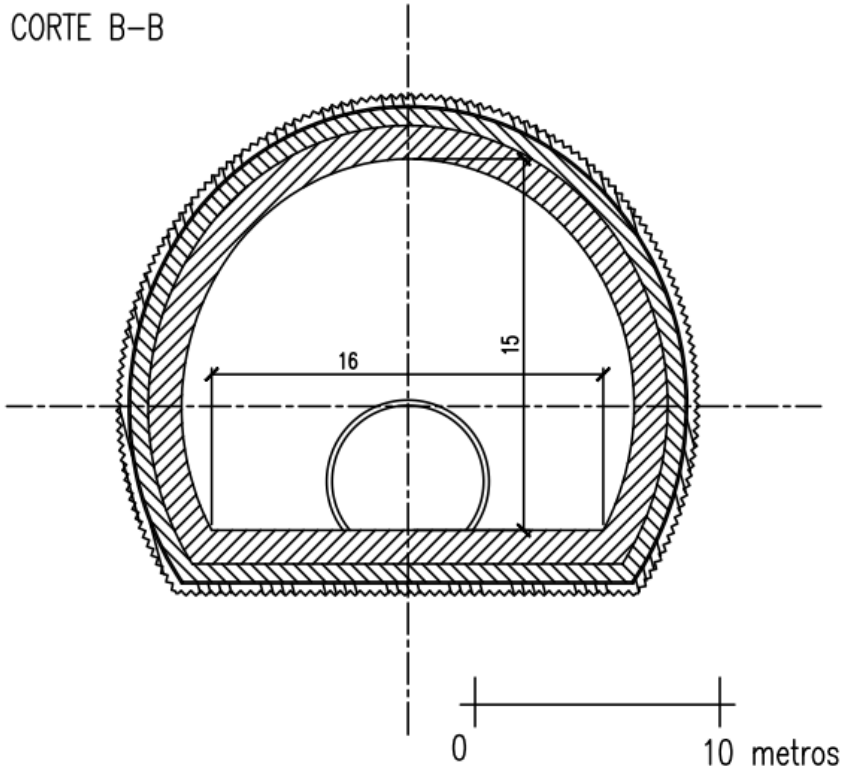

Service Hall
Transverse section

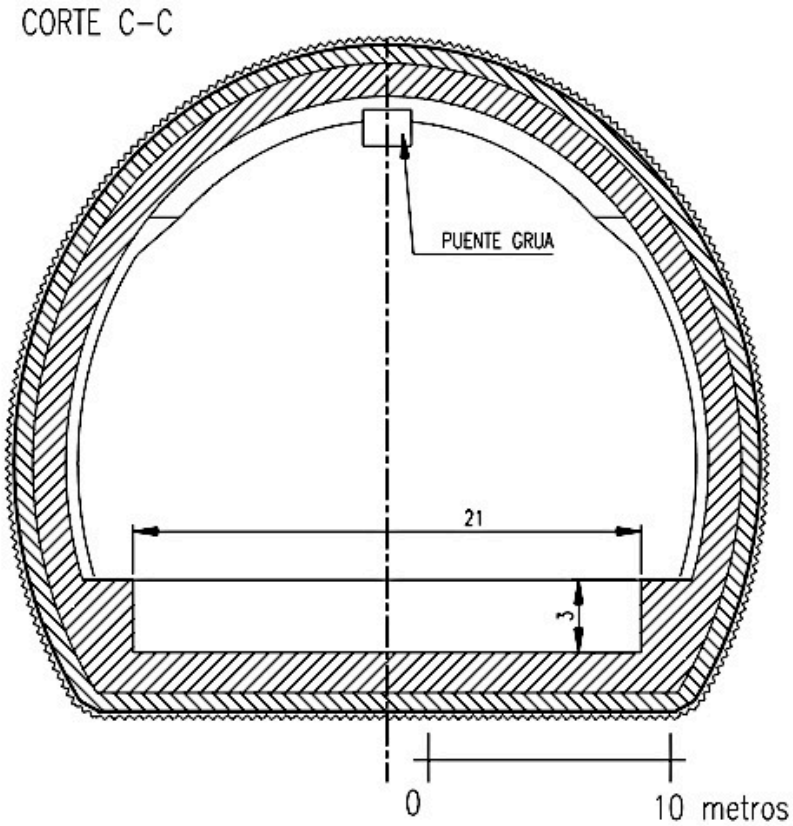

Main Hall
Transverse section

Secondary Halls

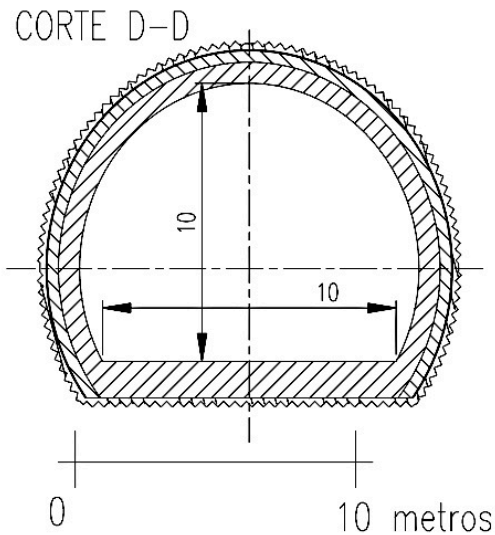

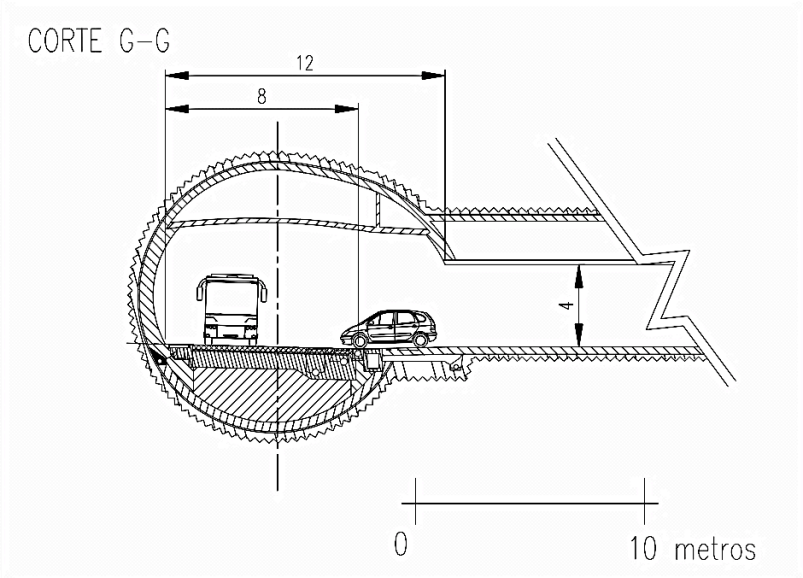

Ultra low rad. Pit

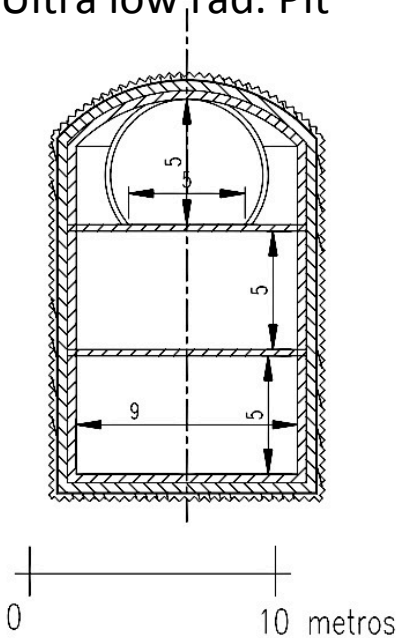

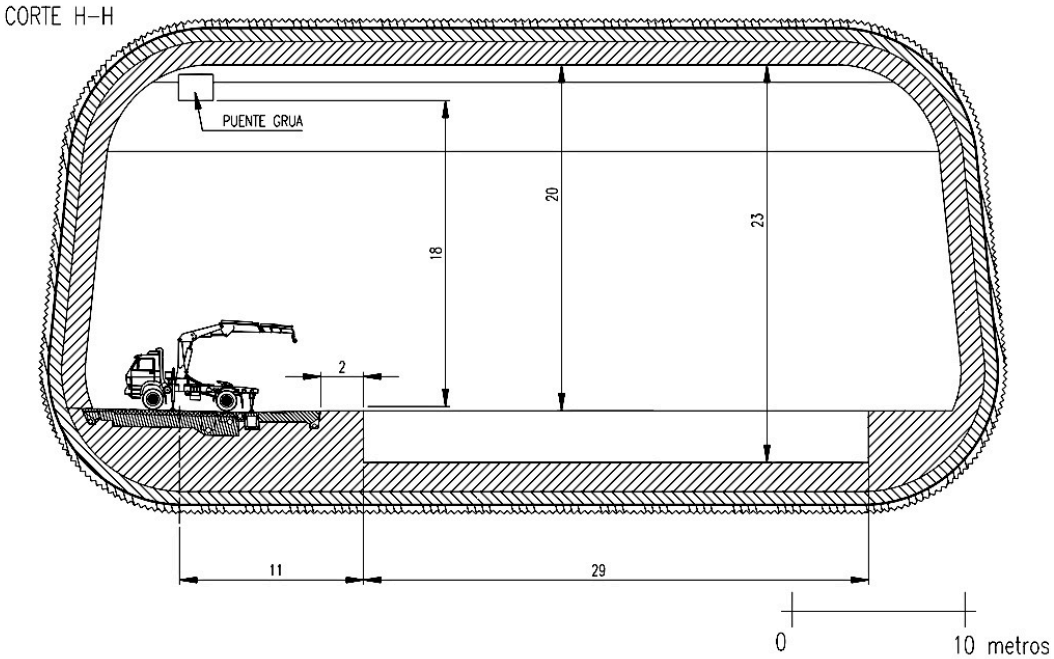

Support Labs

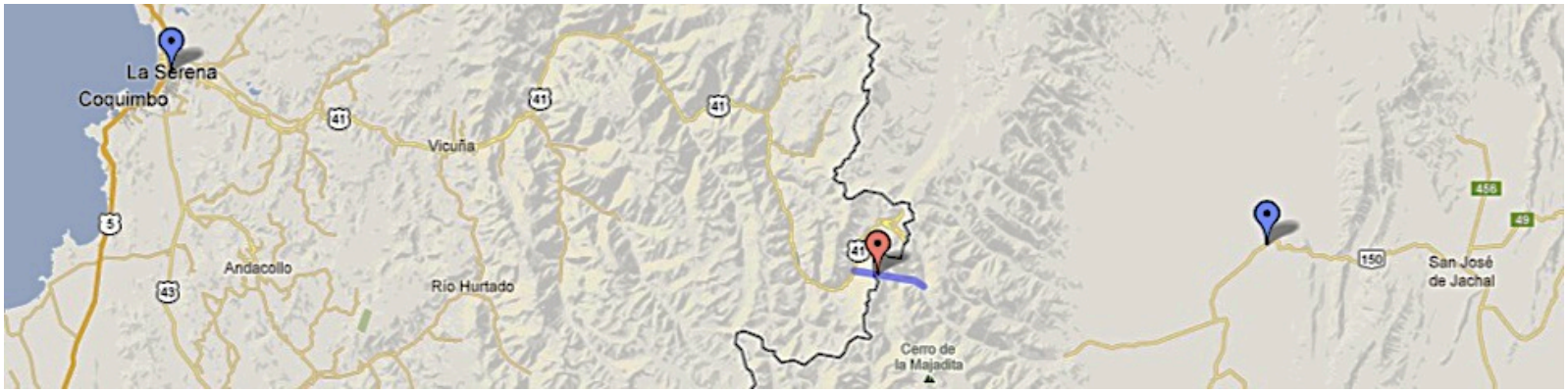

- **Offices at the portals** (for short stays)
- **Two Support Labs** (one on each side):
  - Tentative sites: La Serena (Chile) , Rodeo (Argentina)
  - Integration with local Universities
  - Host a visitor center

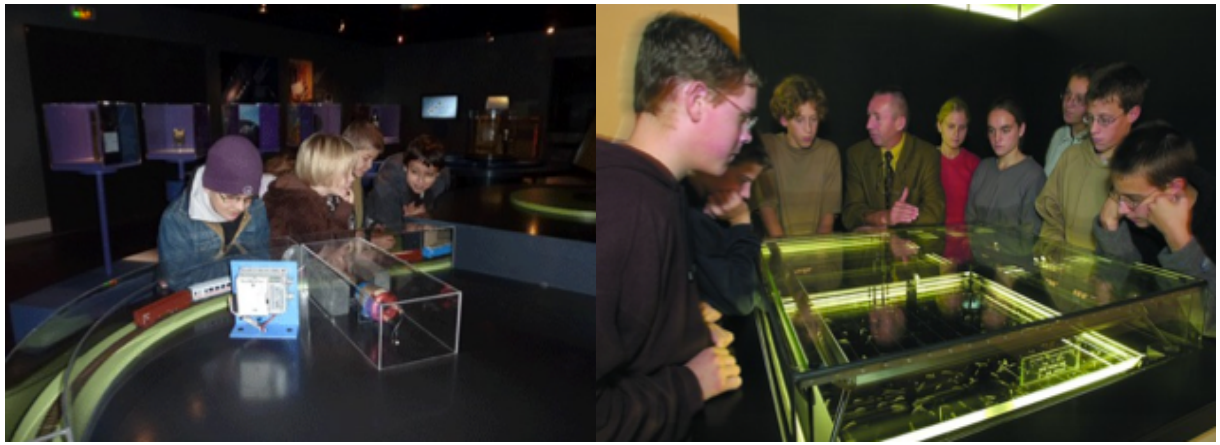

Organization

Proposal for Organization: **CLES**

"**C**onsorcio **L**atinoamericano de **E**studios **S**ubterráneos"
(Latin American Consortium for Underground Studies).

- CLES will manage the ANDES Laboratory
  - With support from external international scientific advisory board.

- Initial participanting countries: Argentina Brazil, Chile and Mexico. Recent interest from Colombia.

- CLES could be the seed for a small CERN-like organization with focus on all underground science (Physics, Biology, etc…)

Current status

- 20 support letters from International community

  (underground lab directors, intl. exp spokespersons, natl. physics associations and academies,…)
- Regional interest: 26 letters from latin american groups.
- Official support from MinCyT (Argentina) and EBITAN (Entidad Binacional Túnel Agua Negra).

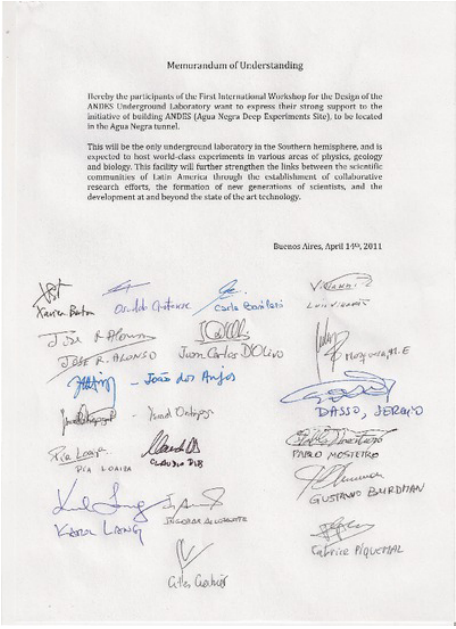

Memorandum of Understanding

Hereby the participants of the First International Workshop for the Design of the ANDES Underground Laboratory want to express their strong support to the initiative of building ANDES (Agua Negra Deep Experiments Site), to be located in the Agua Negra tunnel.

This will be the only underground laboratory in the Southern hemisphere, and is expected to host world-class experiments in various areas of physics, geology and biology. This facility will further strengthen the links between the scientific communities of Latin America through the establishment of collaborative research efforts, the formation of new generations of scientists, and the development at and beyond the state of the art technology.

Buenos Aires, April 1st, 2011

- 3 workshops for the Lab design (Argentina, Brazil, Chile).

- In process: Lab. engineering study, to be included in the tunnel design.
- 4th Workshop early 2014 (Mexico).

Summary

- ANDES is a unique opportunity for a deep and large underground lab in Southern Hemisphere:
  - To educate new scientists in Latinamerica.
  - To establish international collaboration in many sciences.

- International support, interest from exp. collaborations.

- CLES: Opportunity for a Latin American Science integration.

- Expected Construction: 2014 - 2021

- More info at http://andeslab.org

Thank you