Document Approval: **Date Approved**

Originator: Christopher Nantista, Staff Physicist	7/31/'14
Originator: Chris Adolphsen, RF Technical Lead	7/31/14

Revision History

Revision	Date Released	Description of Change
R0	7/31/2014	Original Release.

Abstract:

This note addresses the provision of the high power RF needed to generate and support the accelerating fields in the cavities of the LCLS-II main linac. The requirements and choice of amplifiers are discussed, along with the physical layout and the waveguide circuits through which the RF reaches the fundamental power couplers on the side of the cryomodules. Finally some issues remaining at the time of this writing are presented. Only the main 1.3 GHz L-band systems are treated in this note; other sources, such as those required to power the subharmonic (~186 MHz) electron gun, the harmonic (3.9 GHz) linearizer and the transverse deflecting cavities, are not treated.

Contents:

RF Power Requirement
Cavities per Source Considerations
Technology Options
Baseline Layout
Recent Developments and Remaining Issues
Summary
References

RF Power Requirement:

The superconducting cavities along the LCLS-II linac are to be operated around a nominal gradient of 16 MV/m. With an effective cavity length of 1.038 m and a maximum design beam current of 0.3 mA, this called for a minimum power of 4.98 kW per cavity for on-crest beam acceleration. With an R/Q of 1,036 Ω and the couplers set for a loaded quality factor optimized at $Q_L = 4.12\times10^7$, the actual input power required, accounting for anticipated microphonics-induced resonant frequency excursions of maximum amplitude δf = 10 Hz, rises to

$$P_i(Q_L,\phi_b=0)=\frac{V_c^2}{4(R/Q)Q_L}\left[\left(1+\frac{I_b R/Q}{V_c}Q_L\right)^2+\left(2Q_L\frac{\delta f}{f}\right)^2\right]\approx 5.72\text{ kW}.$$

Assuming an RF transmission efficiency between source and coupler of ~0.937 and adding 10% overhead to cover error margins and statistical variations and avoid saturation, we have a high-power RF source requirement of about **6.71 kW per cavity**. The calculation is a bit more complicated where the beam is run off-crest (*e.g.* -21° in L_2), but, with the cavities slightly detuned to accommodate the angle, the power requirement remains below this.

There are a number of RF sources available that can exceed this per cavity power requirement, and having a few higher power sources is generally cheaper than having many lower power ones. The cost benefit of powering multiple cavities per source must be balanced against gradient stability requirements; are the resulting energy variations within a string of cavities powered in CW mode by one source and regulated as a group with “vector sum” control (as is done in pulsed mode at XFEL), tolerable? In the downstream portion of the linac, where the tolerances on local energy variation are less stringent, such a scheme is expected to work if the cavity energy gain excursions are less than ~1%. As a practical choice, given the available sources to be discussed below, a ~300 kW klystron driving six cryomodules (48 cavities) is a reasonable upper limit for the number of cavities per source. Some of the factors that influence this choice are considered below.

Cavities per Source Considerations:

1. *Local energy stability requirements and local/global feedback control*

Ideally, with an individual source driving each cavity, one could keep the local energy gain very stable by RF phase and amplitude feedback, given that the main perturbations (microphonics) are mostly slower than the approximately 10 ms cavity fill time. This can also be accomplished with piezo tuners (PZTs) on each cavity to control the resonance condition. For example, at HZB, microphonic detuning has been reduced from a 3 Hz rms level to a 0.3 Hz rms level with feedback and feedforward (FB/FF), albeit with a different cavity and cryomodule design. This result is well within LCLS-II requirements, and the energy gain excursions are only a few tenths of a percent. Tests at DESY achieved similar gradient stability in CW mode with no RF nor PZT feedback but with a 90 Hz bandwidth. The stability achievable using piezo compensation alone for each cavity in a group regulated by one RF source needs to be studied further, under conditions required for LCLS-II. In particular, we need to determine the frequency and amplitude range over which microphonics can be compensated without inducing further Lorentz force driven mode vibrations that lead to a discharge of the cavity stored energy. A LLRF development plan is in progress for LCLS-II, including studies of vector-sum operation in conditions relevant to the LCLS-II needs.

Regardless of whether the energy gain of individual cavities, or groups of cavities, are regulated, feedback systems will be required to stabilize the beam energy at key locations. Using dispersion regions in the bunch compressor chicanes and at the end of the linac to measure the bunch energies, the RF systems will be used (either locally or globally) to compensate for any slowly varying energy errors. The electron gun current will also be stabilized on a fast time scale, so that the RF feedbacks do not need to respond as quickly.

2. *RF and beam turn on*

With one RF source per cavity, one possibility for turning on the beam is to first change the RF frequency to compensate the 100-200 Hz Lorentz force detuning (LFD) during a slow ramp-up of the cavity gradient with the beam off. The cavity voltage would be maximized by control of the RF drive frequency. After the cavity is filled, the tuner would be adjusted to move the cavity resonant frequency to the nominal value (1.3 GHz), while tracking it with the drive frequency. Piezo controllers could also be used in a similar manner. That is, the RF power could be gradually ramped (at the nominal RF frequency) and the cavity resonant frequencies continually adjusted with the piezo controllers to compensate for the LFD and maximize the cavity voltage. The Cornell SCRF group has demonstrated this for a single, high Q_{ext} cavity, for which the power was ramped up in about 0.5 seconds. In principle, this could be done with multiple cavities per RF source.

In both cases, RF power is ramped up to about one quarter maximum to achieve the nominal gradient, then to full power as the beam is turned on, ideally increasing both in a single step with matched beam loading. XFEL effectively does this with each RF pulse, although they turn on at full RF power and turn the beam on when the nominal cavity gradients are reached. LCLS-II can do it more slowly, in two steps (beam off and on), to decouple the LFD and beam loading effects on the gradient, and dump the beam before the undulators until the cavity gradients and beam energy reach steady state.

3. *Cost*

Our costing exercises indicated that the high power RF system (not including LLRF controls), would be about two-thirds more expensive using one solid state amplifier (SSA) of approximately 6.3 kW per cavity, than it would feeding groups of 48 cavities fed by a single 300 kW klystron powered by a commercial HV power supply (twice as expensive if the klystron is powered using a refurbished SLAC PEP-II HV power supply). At the 6.3 kW level, using small klystrons or IOTs instead of SSAs would not be much cheaper and would likely reduce reliability.

4. *Layout*

Given the SLAC linac/gallery configuration, having one klystron feed 48 cavities would require only a single air-filled WR650 (or WR770) waveguide every 37 m, which would connect between the klystron and a branched RF distribution system in the tunnel. Single cavity sources would require such a feed for every ~1.5 m, so that four waveguides would need to be fit into each of the 27” diameter penetrations between the gallery and tunnel, located at 20’ intervals.

5. *Availability*

SSAs would provide high availability, considering that single transistor failures would not reduce the output power from a unit by much (approximately 3%). Even if the whole unit failed due to a power supply fault, the power could be increased to other cavities to compensate; more cavities than are needed for acceleration are included in the linac design to allow for compensation of this failure mode. A 300 kW klystron failure would shut off the beam until a spare was installed (about eight hours). With a conservative estimate of a 20,000-hour lifetime, 5 klystrons and 4,000 hours per year operation, there would only be an average of one klystron failure per year. Nonetheless, failures of the klystron

auxiliaries (e.g., filament power supply) would likely be the dominant source of unavailability, though they would probably only reduce the availability by less than 1%.

6. *Optimizing operational efficiency*

It's been shown by L. Doolittle [1] that the overall load on the cryoplant can be minimized by an optimization scheme that, within limits such as available source power and maximum cavity field, seeks to adjust the gradients of all cavities in a given linac region such that they have the same dH/dV, heat load vs. voltage slope, for the required total voltage. Cavities with higher Q_0 would take up some of the nominal voltage of those with lower Q_0. This is easily seen to represent a heat load minimum with respect to redistribution of acceleration.

The scheme considers only dynamic load and neglects field emission, and example Monte Carlo runs with realistic parameters produced an effect on the scale of only a percent or so. Also, it's not clear how accurate Q_0 measurements from cavity qualification would remain, and they cannot be redone in-situ. Still, the need to reduce site power or optimize performance with limited cryo capacity could make it desirable to pursue this. It would obviously be easier and more effective with the flexibility of the one-cavity-per-source option; attempting it in the large klystron layout, either klystron-to-klystron or through Q_L adjustment, would be awkward and wasteful of RF power. One could customize the power distribution, as DESY does, but this would be costly and not as simple with our system, described in section 3.2.

Technology Options:

There are two basic technologies capable of delivering the high-power RF needed to energize the cavities in the LCLS-II linac: (1) vacuum tubes, specifically inductive output tubes and klystrons, and (2) solid state amplifiers, in which the output of a number of low power (few hundred watts) transistors are summed. While the multi-kilowatt RF power levels needed for single cavities can be achieved with either technology, for significantly higher power levels vacuum tubes have the advantages of not requiring complex combining networks and cost rising much less than linearly with power.

1. *Vacuum tubes*

Vacuum tubes suitable for modern particle accelerators include triodes, inductive output tubes (IOTs) and klystrons. Klystrons and triodes have been the traditional power source for particle accelerators because they produce high power RF and offer high gain with efficiencies often exceeding 50%. Triodes are applicable at frequencies below approximately 300 MHz, and therefore are not considered for the LCLS-II linac.

IOTs present an attractive alternative to traditional klystrons for accelerators in the lower UHF frequency range. IOTs have recently become available at L-band frequencies with efficiencies around 60% and gains of approximately 20 dB. Still, IOT gain is inherently low compared to that of klystrons (typically 50-60 dB), requiring considerably more RF drive power. Although not established in a long-running accelerator facility, L-band IOTs have been successfully operated, for example, in the ALICE (ERLP) facility at Daresbury [2] and in the cERL at KEK [3]. Also, low power IOTs are typically designed with higher efficiency than klystrons.

Table 1 lists the operating parameters and output power of several commercially available vacuum tube RF power sources of both types, suitable or adaptable for use in LCLS-II. Current IOTs can provide tens of kilowatts at 1.3 GHz; a principal consideration in pushing into the 100 kW CW range is the increased RF drive power needed, due to their low gain. L-band CW klystrons range in power from several to a few hundred kilowatts.

For LCLS-II, L-3 has proposed to modify the 13 kW klystron (L-4313) they developed for JLAB to deliver up to 7 kW at 1.3 GHz with 40 dB gain and at least 48% efficiency. Their older 8 kW tube would seem a closer match, but is less efficient, even though it uses a permanent magnet rather than solenoid focusing.

Table 1. Commercially Available Vacuum Tube L-Band CW Power Sources (klystrons and IOTs).

KLYSTRONS

Manufacturer	CPI			e2v	L-3		Toshiba	
Model	VKL-7811ST	VKL-7966A	VKL-7967A	K3415LS	L-4941	L-4313	E3750	E37750
Frequency (GHz)	1.3	1.497	1.3	1.3	1.4-1.5	1.4-1.5	1.3	1.3
Beam voltage (kV)	15.5	33.5	61	45	14	14.3	20.5	50
Beam current (A)	2	6.5	8.5	5.5	1.76	1.75	2.5	10
Output power (kW)	10	110	300	120	8.0	13	30	300
Gain (dB)	34	55.5	45.9	45	35	>40	52	40
Efficiency (%)	34	51	58	51	32.5	50.5	60	63

IOTs

Manufacturer	CPI	e2v	L-3	Thales
Model	VKL-9130A	116LS	L-4445T	TH713
Frequency (GHz)	1.3	1.3	1.3	1.3
Beam voltage (kV)	34	25	34	34
Beam current (A)	1.3	1.1	1.14	0.88
Output power (kW)	30	16	20	20
Gain (dB)	21	20	22.8	20.9
Efficiency (%)	64	60	52	60.4

2. *Solid state amplifiers (SSAs)*

Recent improvements in LDMOS transistor technology have led to increased power capability of solid state amplifiers (SSAs). Individual transistors can reach power levels on the order of a couple of hundred watts, and by combining many transistors in a single system, several to tens of kilowatts can be achieved with modest impact on efficiency. SOLEIL has built systems that produce 45-50 kW at 352 MHz and 476 MHz. At the higher L-band frequency, Bruker-Biospin has developed for ELBE a

10 kW CW SSA source, successfully operated since 2010. With high power transistors, 16 kW can now be produced in a 10-unit rack. Finally, Cornell recently purchased a 5 kW system from Bruker for the CW SCRF program, and they are satisfied with its performance. The division responsible was transferred in 2013 from Bruker to SIGMAPHI Electronics.

System operating efficiency for such L-band SSAs does not typically exceed 40%. This technology is still emerging, and further advances, including better efficiency, can be expected in the future, likely reaching 45-50%. However, for the same reason — lack of maturity — the reliability of these systems at present is less well established. Since several facilities now have SSAs in place, operational data is continuing to be acquired. The modularity of this option, with its soft failure mode compared to klystrons, is another factor in its favor. As transistor technology advances, “plug compatible” rack inserts are likely be used to replace failed units (for example, at SOLEIL, a 3% per year transistor failure rate causes no additional downtime, as they are repaired during scheduled maintenance periods.)

3. *Source selection*

For the baseline LCLS-II design, there is one SSA source per cavity for the first three and last two cryomodules (CMs), with the remaining CMs powered by five 300 kW klystrons, each feeding 48 cavities. The last two CMs were originally designated as SSA-powered for quantization reasons, though they’ve since been made their own linac region, L_f, to be used as a beam energy compensation vernier.

a)

b)

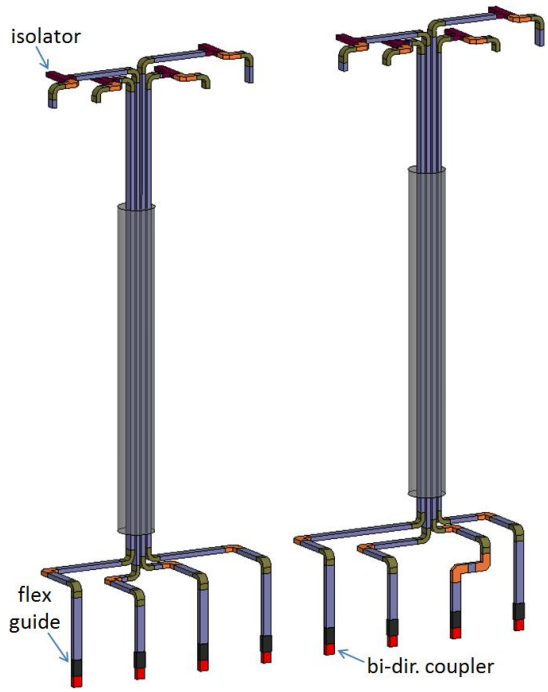

Figure 1. a) Photograph of the Bruker-Biospin 10 kW 1.3 GHz CW Solid State Amplifier (SSA) cabinet and b) preliminary layout of WR650 waveguide from 8 SSA racks feeding a cryomodule through two 25’ penetration shafts, 20’ apart.

3.1. *Solid-State Amplifiers*

While no off-the-shelf SSA sources match LCLS-II needs, Bruker-Biospin (now SigmaPhi Accelerator Technologies) has offered a 6 kW version of existing high-power (5-16 kW) systems. As an example, Fig. 1a shows their 10 kW rack unit that consists of eight 1.25 kW water-cooled modules. Each module contains eight 160 W isolated transistor units that are summed to a coaxial output, and then coupled into a common WR650 output waveguide. Some of the specifications for Cornell's 5 kW system are shown in Table 2. Although a 43% efficiency is listed, the company quotes only 35% overall AC to RF efficiency. For 6.5 kW, a 480 VAC power supply at the bottom of the rack would supply up to 50 V for the drain voltage. Facilities requirements per rack would be 18 kW AC and 6 gpm cooling water.

Table 2. RF specifications of the 5 kW Bruker-Biospin solid-state amplifier used at Cornell.

Frequency range	1,300 MHz ± 5 MHz
Linear gain	67 dB
Gain flatness in frequency range	±0.2 dB
CW & pulsed output power (1dB Compression)	5,000 W min
Amplifier biasing	class AB operation
RF rise time	< 100 ns
RF fall time	< 70 ns
Input noise figure	8 dB max
Output noise power	-99 dBm @ 1 Hz
IN/OUT impedance	50 Ω
Input VSWR	1.5 max
Output harmonics 2nd order/3rd order	-45 dBc min / -60 dBc min
Amplitude stability/temperature	±0.20% / °C
Power RF efficiency	43% typ. at 5 kW output
Input power supply	380V/400V 50/60Hz three phase
Max output VSWR	∞ up to 1.5 kW CW

Penetration shafts between the SLAC linac gallery and the tunnel are at 20' intervals. The cryomodule length is about twice that, and each houses eight cavities. Therefore, four cavities are powered through each penetration. Four WR650 waveguides from side-by-side SSA racks can fit through the 27" diameter hole, as illustrated in Fig. 1b. If the remaining room is insufficient for cables and related equipment, half-height WR650 or rigid coaxial transmission line may be used. A waveguide isolator for absorbing reflected power will be incorporated at the gallery end of each waveguide feed to reduce heat dissipation in the tunnel. Forward and reflected RF signals will be brought up through cables from bi-directional couplers near the cavity coupler inputs.

3.2. *Three Hundred Kilowatt Klystrons*

For the high power source, one candidate is the 300 kW CW klystron built by Toshiba (E37750) and installed at the compact ERL demonstrator at KEK [4]. It has 63% efficiency and operates at 50 kV. The klystron requires no oil tank and operates with a beam voltage of 49.5 kV and beam current of 9.8 A at 62% efficiency. It does, however, require considerable cooling water (more than 100 gpm). CPI produces a similar 300 kW klystron (VKL-7967A), operating at 61 kV and 8.5 A with 58% efficiency. Both tubes are pictured in Fig. 2. As a suitable power supply for either of these the Thomson 540 kVA, 55 kV design used in NSLS II at BNL (see Fig. 3) was considered, for which an efficiency of 95% is measured. The current baseline plan is to instead use refurbished PEPII HV supplies. Though the footprint required for this equipment is large, the resulting RF power is sufficient to feed six cryomodules, or 48 cavities along a span of about 50 m of linac, and the power supplies will be situated outside of the gallery.

a) b)

Figure 2. 300 kW L-band CW klystrons: a) the Toshiba E37750 and b) the CPI VKL-7967A.

a)

b)

Figure 3. a) Thompson's 540 kVA, 55 kV PSM switching supply and b) SLAC's PEPII HVPS.

Linac operation with multiple cavities driven by a single source has been demonstrated at the FLASH facility and is assumed in the ILC design [5], but not in CW operation as needed for LCLS-II. Unlike the ILC design, in which cavities are pushed to their individual gradient limits, LCLS-II does not incorporate expensive adjustable power dividers for tailorable division. Rather, it uses equal power division, since at about half the ILC gradient nearly all cavities are expected to sustain full field. Fig. 4 shows a waveguide layout, in which all but two waveguide "T" junctions are equal binary splits, for powering six cryomodules from a ~300 kW klystron. An additional feature required in this waveguide system is an approximately 90°–range phase shifter at each cavity (nominally operating at mid-range). Also, the isolators for this shared system must be located near the cavities, to prevent RF cross-talk between them, thus requiring cooling water in the tunnel. Tunnel waveguide and heat load could be minimized by doing more of the splitting in the gallery and using more shafts, but this would significantly increase the total amount of waveguide.

In the course of our ILC RF R&D program, SLAC has developed and built similar single-cryomodule waveguide distribution systems for the cryomodules in the NML Building at FNAL [6]. These systems have been run pulsed at multi-megawatt levels, so 300 kW will not be a problem from a peak power standpoint. However, the waveguides may require water cooling from the klystron up to the 2:1 second splits, particularly through the insulated environment of the shafts.

If the performance of a single cavity degrades significantly, it will be detuned, and, if the coupler is breaking down, the input waveguide may need to be disconnected in the tunnel and shorted to reflect its RF power into its isolator load. If, however, the cavity can still be operated at a somewhat lower gradient, the split ratio for the final power divider might be changed to lower the power to that cavity and raise power to the adjacent one (similar to the XFEL plan). Splitters with different power ratios can be prepared in advance for such use, and the change out time is expected to be less than four hours. The cavity couplings (Q_L) would also be adjusted accordingly.

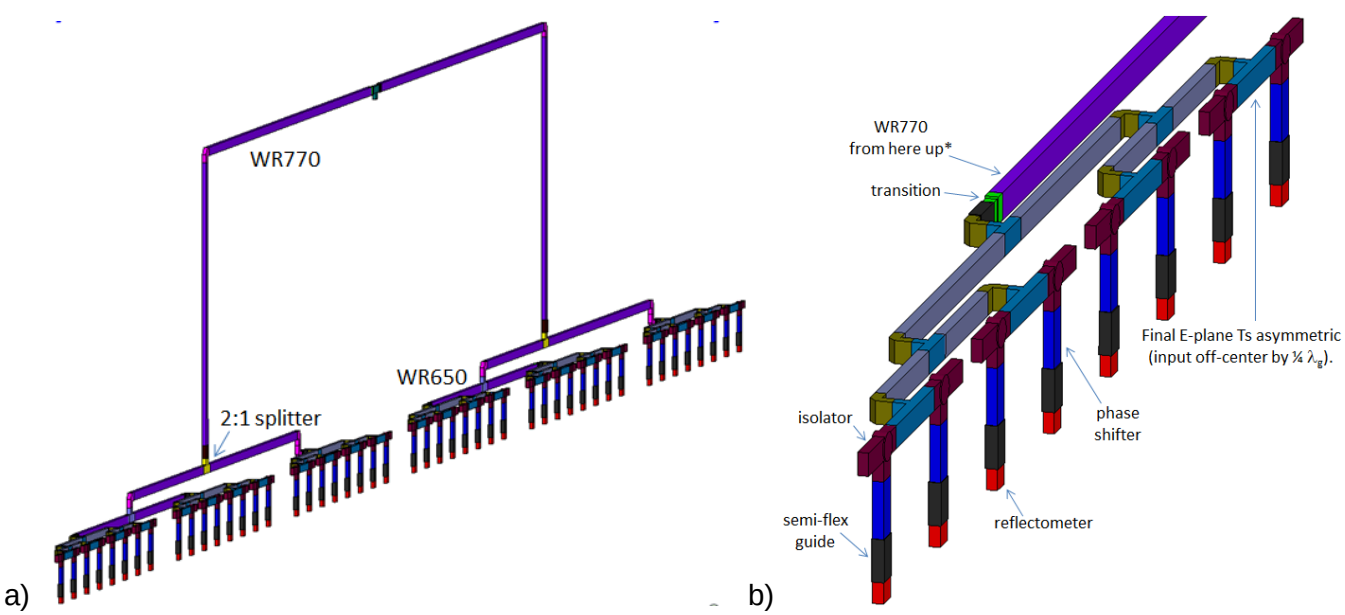

Figure 4. a) Schematic of the branched waveguide power distribution system layout connecting a 300 kW klystron to 48 cavities and b) a close-up for one cryomodule with components identified.

3.3. *Baseline Linac Layout*

The large klystron solution is economical. However, it is most effectively implemented where the number of cryomodules is divisible by six. In any case, for the low energy end of the linac, beam dynamics requires greater individual cavity control. Therefore, the baseline design incorporates both L-band technologies. The plan is to use the single-cavity-per-source SSA option for powering the L_0 cryomodule and the two L_1 cryomodules, use the large klystron option for the twelve cryomodules of L_2 and the eighteen of L_3, and go back to SSAs for the two CMs of L_f, recently split off from L_3. This makes for a total of 40 SSAs and 5 klystrons, powering respectively 5 and 30 cryomodules. A spare klystron will be procured for quick substitution in case of a failure, a sixth power supply will be installed and stand ready in case one of those fails, and replacement SSA modules will be kept on hand. In L_0, the cavity gradients and phases vary by design along the cryomodule, and in L_f the individual RF control will be used to counter-phase cavities, providing final fine energy compensation without affecting Lorentz force or cryogenic load.

Along the linac, one cavity every two cryomodules (6.25%) was designated a spare, to be held in reserve and powered in the event of a cavity failure. Note, however, that accelerating voltage is proportional to gradient and cryogenic heat load to gradient squared. Therefore, for a given total voltage, cryogenic load is reduced by running more cavities at lower gradient. For this reason the plan changed to instead run all available cavities with up to ~3.28% added RF power overhead.

Recent Developments and Remaining Issues:

Since the baseline design was captured for CD1, and even starting before, a number of changes have been under consideration and several adopted. The preceding incorporates or mentions some of these developments. Others warranting attention we present here, noting that final project design details are still taking shape.

1. *Baseline Reconfiguration Consideration*

The inclusion of the 300 kW klystrons in the RF power design has long been controversial. This is primarily occasioned by the risk perceived in trying to operate multiple cavities in CW mode with a common source, though the required R&D and added design work and the more disruptive failure mode are also factors. Stabilizing gradient over multiple cavities through vector sum control should be sufficient, at least at high beam energy, and has been demonstrated at some level, but there is not sufficient experience at our proposed scale and parameters at CW. In particular, it needs to be established that piezo tuners can prevent any individual cavity from falling off the detuning curve during operation. Therefore, discussion continued of the possibility of adopting a uniform powering scheme, namely using single cavity SSAs for all 35 L-band cryomodules. An assessment of the relative cost of the two options and the HLRF and LLRF implications were the subject of an external review on April 29, 2014. The decision of project leadership was, for budgetary reasons, not to accept the proposed baseline design change at this time. Rather, R&D aimed at demonstrating the multicavity approach will be continued.

2. *Reduced Initial Beam Power*

In the initial phase of LCLS-II, the beam current will be limited to 0.1 mA, one third of the original design maximum, with the nominal set at 62 μA (providing for more overhead). To avoid a ~50% rise in Q_L and thus retain reasonable cavity bandwidth for LLRF control, cavity couplings will still be set for the full current optimum, ~4.12×10^7. The full RF power capacity will have to be installed where provided by the 300 kW klystrons, though they can be run at lower voltage, with a hit in efficiency. The modularity of the SSAs, on the other hand, allows us to scale back their specification. We will require only up to **3.8 kW** capability from the SSAs. The 6.7 kW needed for 0.3 mA will hopefully be achievable by upgrading rather than replacing these, though upgradability has been abandoned as a requirement. Isolators and the rest of the waveguide systems should be capable of handling full (upgrade) power. This reduced installation of SSA power will be of greater significance if the large L-band klystrons are eventually eliminated.

3*. High Power RF Transmission Options*

The current assumption is that rf power will be delivered from the sources to the fundamental power coupler inputs through WR650 waveguide and components, with larger and lower-loss WR770 possibly substituted in the longer runs from the klystrons. A couple of issues have brought into consideration modifications to this baseline scheme.

3.1. *High-Power Coaxial Cables*

The cryomodule length does not exactly correspond to the periodicity of the existing shafts, and this periodicity is broken anyway at the end of each sector. Thus the cryomodules will presumably fall at random rather than fixed positions relative to the penetration shafts that serve them. This is not a big issue for the klystron systems, because they use few shafts and the penetration waveguides can simply be run over to a standardized waveguide tree input, fixed relative to the cryomodules. For the SSA waveguide feeds, however, the runs along the tunnel will need to be customized to align each with its respective cavity coupler. Rather than custom order waveguides, a section for each feed will likely be truncated and have one end flange welded on at the lab. This is a design complication that will add to the installation cost.

It would be much easier to accommodate varying shaft to cavity distances if the final power delivery were done through cable. With waveguide-cable adaptors, these could be used to connect between waveguides at the penetrations and input assemblies attached to the cryomodules. A high-power coax cable rated for up to 9-10 kW at L-band has been identified as a possible candidate for application in LCLS-II, namely 3” HELIFLEX Air-Dielectric Coaxial Cable (HCA33-50J). Its bending minimum bending radius is 11 inches would make connections possible with a fixed set of lengths. Its attenuation constant is more than double that of WR650 though, which would add ~1–2% transmission loss, and it would require the isolators to be in the tunnel to avoid the VSWR exceeding its field limitations at high beam current. The main problem, however, is that it contains a polyethylene helical spacer and is not available in a radiation-hard version. Tunnel radiation levels are expected to be high, and the lifetime of such cables in such an environment is in question. Also, the coax waveguide connectors would also pose a problem if they contain non-rad-hard material.

3.2. *Half-Height Waveguide*

Compared to the single S-band waveguide currently traversing each penetration shaft, the four WR650 L-band waveguides required for single cavity per source (SSA) feeding of LCLS-II take a lot of space. Depending how they're packed and whether one counts flanges, they can occupy ~17-34% of the 27" diameter cross-section. While there is room to fit them side-by-side, the penetrations need to also house other equipment, primarily a large number of various cables. A final allotment of space within the cross-section has yet to be laid out, but it is foreseeable that the large waveguides may pose a problem. It is therefore considered a backup plan to utilize ½-height WR650 to conserve space. It should be noted, however that, in addition to being non-standard, such waveguide would increase transmission losses by 1-2%.

Another issue that might move us to ½ height is radiation. Calculations are underway, but the fact that the penetration provides a line-of-sight radiation path from the new beamline to the gallery (unlike for the old S-band linac) is cause for concern. The less empty waveguide interior space, the more densely the penetration can be packed, *e.g.* with bags of neutron absorbing material. In fact, it may even be necessary to incorporate a jog in the waveguides. The high-power RF cables described above could further reduce empty space, but they'd also further increase losses and, as noted, lifetime is an issue.

4. *Location of Directional Couplers*

A waveguide bi-directional coupler, or reflectometer, is included in each cavity feed to allow the LLRF control system to monitor forward and reflected power. For the klystron power distribution systems, these are the last component connected to the cavity couplers, after the isolator. For the SSA waveguide assemblies, the isolators with their water cooled heat loads are moved up to the gallery for convenience. The reflectometers were left in the tunnel in the baseline layout. We've since thought to move them up to the gallery as well, an idea to which the LLRF experts did not immediately object, primarily to reduce by 8 the number of RF diagnostic cables needed in each penetration. This change has been reconsidered, however, due to the temperature sensitivity of the long waveguide run phase length, ~1.34°/°F/50', and the non-controlled gallery environment. The main indicator of cavity tune is the relative phase measurement between the input RF and the cavity field probe, and this must be stable at the 3° level for LLRF to maintain cavity tuning sensitivity at the 1 Hz level.

Summary:

The LCLS-II main linac cavity RF power requirement is determined to be at maximum ~6.71 kW for the original beam current and ~3.76 kW at the reduced current. Configurations for delivering this power from available RF sources are discussed, along with the amplifier technology options. Based on our considerations, two technologies are incorporated in a baseline design, SSAs feeding single cavities and klystrons feeding 48 cavities (6 CMs). Appropriate waveguide distribution circuits between the gallery and tunnel are briefly described. Finally, some remaining issues and changes that have been considered are mentioned, the most significant being the proposed elimination of klystrons, which though economical present more of a controls challenge, in favor of all SSAs.

References:

[1] L. Doolittle, LCLSII-4.5-EN-0223 “Monte Carlo Linac Evaluation and Optimization,” June 2014.

[2] R. Bate *et al.*, “Commissioning of the ERLP SRF Systems at Daresbury Laboratory,” proceedings of the 11th European Accelerator Conference (EPAC08), Genoa, Italy, June 23-27, 2008.

[3] S. Sakanaka *et al.*, “Status of ERL and cERL Projects in Japan,” proceedings of the XXV Linear Accelerator Conference, Tsukuba, Japan, September 12-17, 2010.

[4] S. Fukuda *et al.*, “RF Source of Compact ERL in KEK,” proceedings of the First International Particle Accelerator Conference (IPAC’10), Kyoto, Japan, May 23–28, 2010.

[5] The International Linear Collider Technical Design Report, SLAC-R-1004, ISBN 978-3-935702-77-5 (2013).

[6] Christopher Nantista *et al.*, “Progress in L-Band Power Distribution System R&D at SLAC,” proceedings of the XXIV Linear Accelerator Conference, Victoria, B.C., Canada. Sept. 29-Oct. 3, 2008.