Document Approval: **Date Approved**

Originator: Yuriy Pischalnikov, FNAL Senior Engineering Physicist *Signed via Email*	**8/4/2014**
Originator: Warren Schappert, FNAL Senior Engineering Physicist *Signed via Email*	**8/5/2014**
Originator: Evgueni Borissov, FNAL Mechanical Engineer *Signed via Email*	**8/5/2014**

Revision History

Revision	Date Released	Description of Change
R0	8/5/2014	Original Release.

Table of Contents

1 Abstract 2
2 Overview 2
3 Specifications 3
4 Design 4
4.1 Slow Tuner 5
4.2 Fast Tuner 7
5 Performance 10
5.1 Efficiency 10
5.2 Repeatability 11
5.3 Resolution 11
5.4 Pressure Sensitivity 11
5.5 Mechanical Bandwidth 13
6 Lifetime and Reliability 14
6.1 Slow Tuner 14
6.2 Fast Tuner 14
6.2.1 Environment 14
6.2.2 Shear Forces 15
6.2.3 Current Transients 16
6.2.4 Radiation Damage 16
7 Alternative Designs 16
7.1 Design 17

7.2 Motor/Gearbox/Lead-screw Assembly 18
7.3 Piezo Actuator 20
8 Testing and Quality Assurance 20
8.1 Design Validation 21
8.2 Component Acceptance Testing 21
8.3 Integration Testing 22
9 References: 22

1 Abstract

This paper describes design features of the proposed LCLS-II cavity tuners, including piezo actuators for damping of cavity microphonic perturbations. Alternative designs are also discussed. The piezo actuator and stepper motor longevity and reliability issues are discussed. Algorithms for control of the piezo tuner are also discussed.

2 Overview

The LCLS-II tuner is a modified version of the Saclay-I [1] compound lever mechanical tuner design as shown in Figure 1. The tuner allows the resonance frequency of each cavity to be precisely tuned to the RF power carrier frequency by applying an axial force across the cavity. The force from the tuner can change the cavity length by up to approximately one mm, which in turn can change the resonant frequency by up to a few hundreds of kHz.

A tuner is mounted on each cavity on the end opposite the power coupler. Slow or "static" tuning is provided by a stepper motor driving a lead-screw through a planetary gear box. As the lead-screw turns, it applies a force between the helium vessel and the cavity beam tube flange via a compound lever. Dynamic tuning is provided by piezo actuators in the top and bottom linkages that transmit the force from the lever to the beam tube flange.

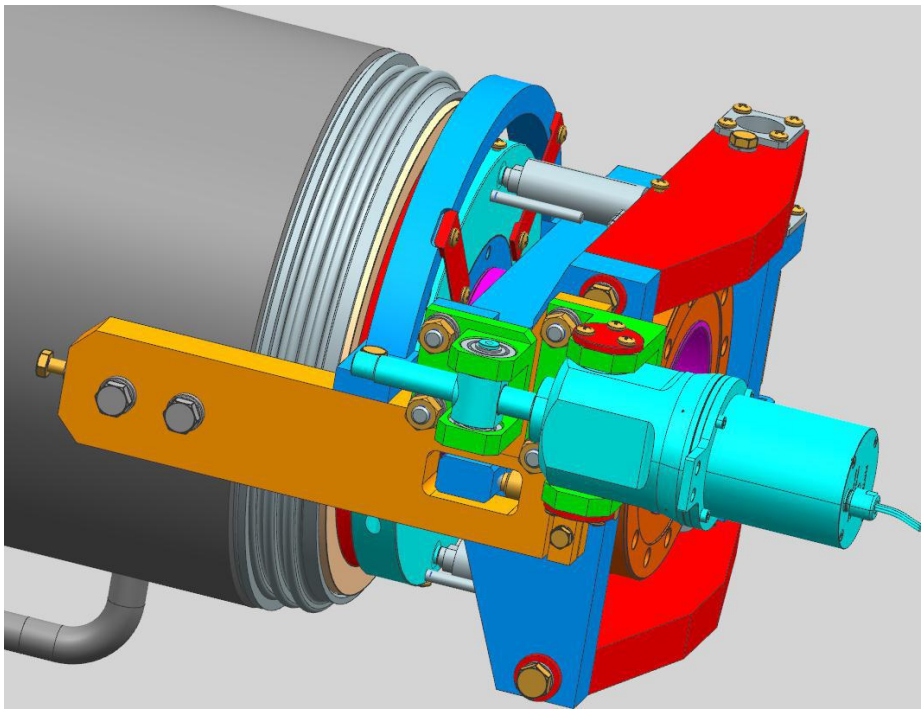

Figure 1: LCLS-II Tuner

3 Specifications

Tuner specifications are listed in Table 1. The design of the tuner is driven by the need to:

- Tune the cavity to the RF drive frequency following cool-down of the cryomodule;
- Compensate for dynamic detuning due to the Lorentz force and microphonics; and
- Tune the cavity off-resonance in the case of failure.

Table 1: LCLS-II Tuner Specifications

Cavity		
Parameter	**Value**	**Units**
Frequency	1.3	GHz
Half-Bandwidth	30	Hz
Tuning Sensitivity	340	Hz/um
Spring Constant	3	N/um
Operating Pressure	$<5x10^{-5}$	torr
Operating Temperature	20-60	K
Operating Lifetime	20	Years

Slow Tuner		
Parameter	**Value**	**Units**
Frequency Range (nominal/maximum)	250/420	kHz
Stroke (nominal/maximum)	740/1300	um
Frequency Resolution	20	Hz
Spatial Resolution	60	nm
Repeatability	60	nm
Stiffness	30	N/um
Lifetime	1000	Spindle rotations

Fast Tuner

Parameter	**Value**	**Units**
Frequency Range	1	KHz
Stroke	>3	um
Frequency Resolution	<1	Hz
Spatial Resolution	3	nm
Mechanical Bandwidth	5	kHz
Lowest Mechanical Resonance	5	kHz
Lifetime	$5x10^{9}$	pulses

4 Design

The operation of the tuner is shown schematically in Figure 2. The stepper motor drives a lead screw through a planetary gearbox. The lead-screw in turn drives one end of a compound lever with a ratio of 1:20. Encapsulated piezo actuators transmit force from the center of the long lever to a clamp ring connected to the cavity. The other end of the compound lever is supported by an adjustment screw that can be used to apply preload to the piezo actuator.

As the motor operates it applies pressure to the cavity changing its length. The stroke of the slow tuner, 740 um, provides the required static tuning range of 250 kHz. The piezo actuators provide a stroke of 3 um corresponding to the required dynamic tuning range of 1 kHz.

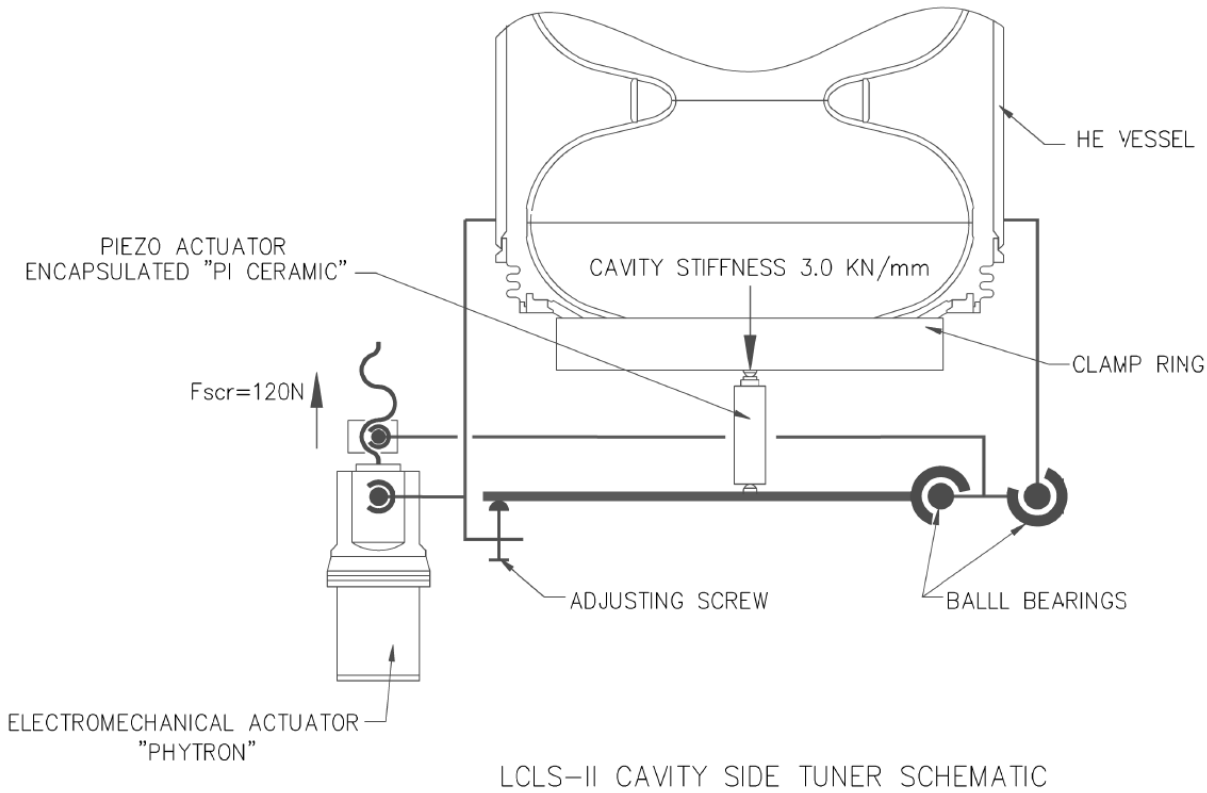

Figure 2: Tuner Operating Principle

4.1 Slow Tuner

A computer model of the slow tuner is shown in Figure 3 and component specifications of the slow tuner are listed in Table 2. A computer model of stepper-motor/gearbox/lead-screw assembly is shown in Figure 4.

The slow electromechanical actuator consists of an integrated stepper motor/gearbox/lead-screw were developed by Phytron as a potential replacement for the XFEL actuator. These actuators have been successfully tested in insulated vacuum environment at T=77K for a total of 6.5 times the XFEL actuator operational lifetime requirement. The levers are constructed from non-magnetic stainless steel.

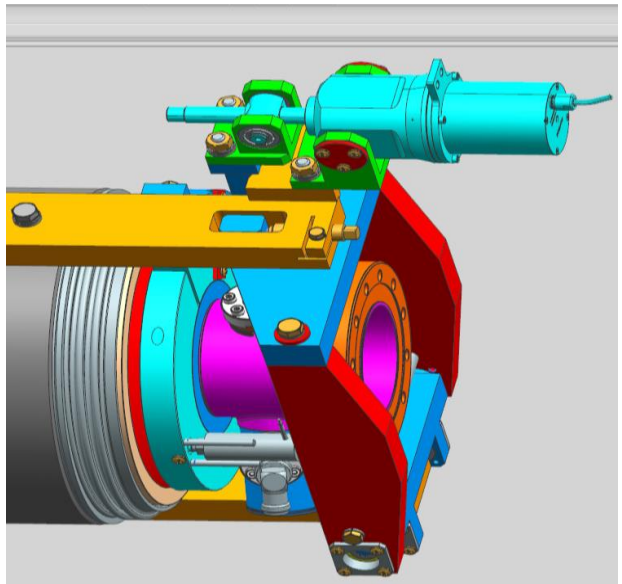

Figure 3: Stepper-Motor/Lead Screw Actuator

Table 2: Electro-mechanical actuator

Stepper Motor/Gear Box/Spindle&Nut		
Manufacturer	Phytron	
Model	LVA 52-LCLS-II-UHVC-X1	
Stepper Motor Model	VSS5.2.200.1.2-4Lp-X	
Operating Current	1.2	A
Steps/Revolution	200	steps
Operating Temperature	200	K
Operating Pressure	High vacuum	
Gear box type	Planetary	
Reduction Ratio	1:50	
Lead Screw Material	Ti	
Lead Screw Length	70	mm
Thread	M12x1	
Nut Material	Stainless Steel	

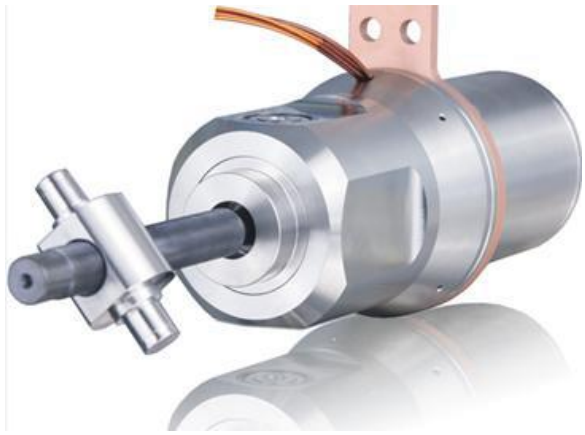

Figure 4: Phytron LVA 52 - LCLS II - UHVC - X0 Stepper Motor/Gear Box/Lead-screw Assembly

4.2 Fast Tuner

The fast tuner consists of two independent encapsulated piezo-actuators inserted between the lever of the slow tuner and the clamp ring attached to the cavity as show in Figure 1. In the absence of a piezo drive voltage, the actuators simply transmit the force from the slow tuner to the cavity. When voltage is applied to the actuators, they exert additional force on the cavity to provide rapid precise control of the cavity frequency. Actuator specifications are listed in Table 3. Two actuators provide redundancy in the event of a failure and the piezo elements are encapsulated to minimize shear forces, which might lead to damage.

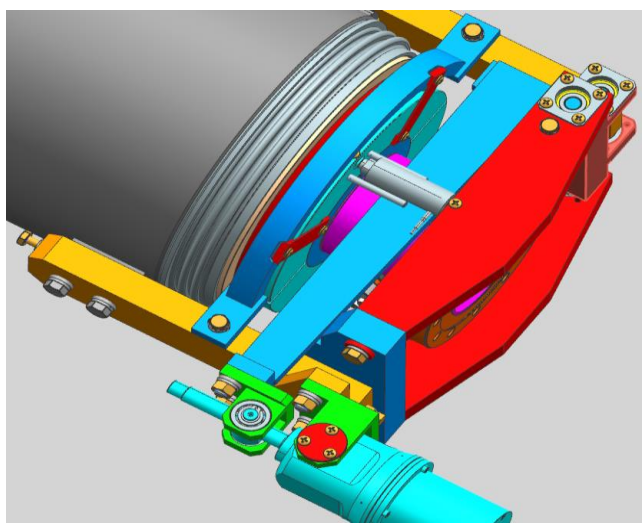

Figure 5: Top Piezo Actuator Location

Figure 5 through Figure 9 show pictures of the piezo actuators and details of the mounting and encapsulation.

PICMIA actuators manufactured by PI-Ceramic were selected for their reliability. There are results [2, 3, 4, 5] of the reliability studies from different researches which illustrated lifetime of the PI-Ceramics piezo up to $1x10^{12}$ cycles. XFEL selected PI-Ceramics piezo-actuator for XFEL fast tuner. The actuators

are encapsulated in stainless steel housings designed to prevent the transmission of shear forces to the actuator.

Table 3: Fast Tuner Component Specifications

	Piezo Actuator		
Manufacturer	Physik Instrumente		
Model	P-888.90		
Material	PICMIA		
Length	36		mm
Width	10		mm
Depth	10		mm
	273K	**20K**	
Blocking Force	3800	3800	N
Maximum Voltage	120	120	V
Stroke	38	8	µm
Stiffness	100	100	N/ µm
Capacitance	13	3	µm
Resonant Frequency	40	40	kHz

Figure 6:PICMA Low-Voltage Linear Piezo Actuators

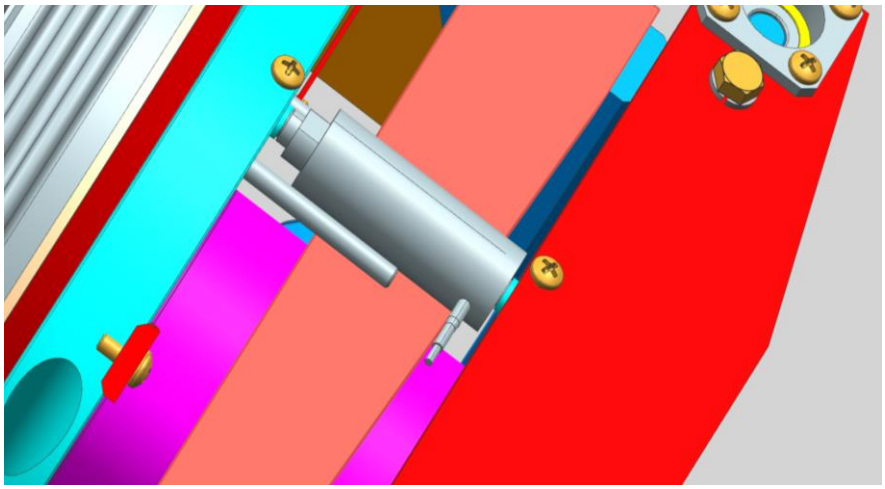

Figure 7: Piezo Actuator Capsule Installed in the LCLS-II Tuner Mechanism

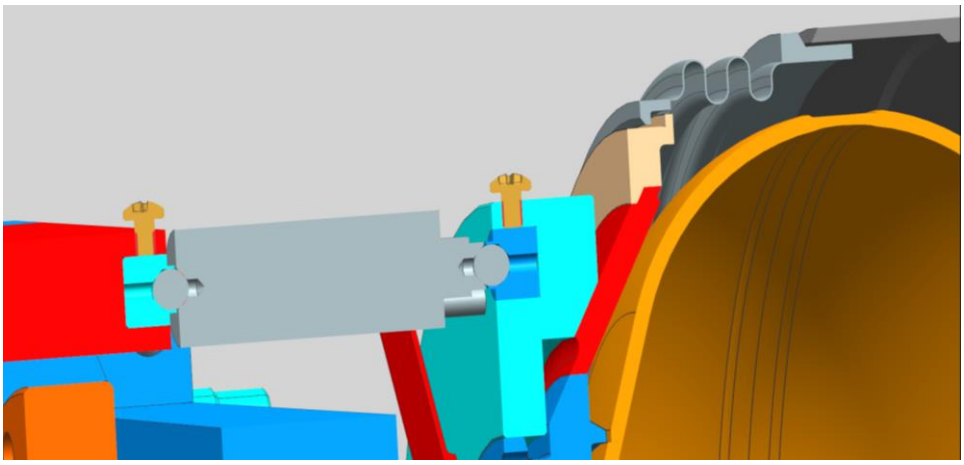

Figure 8: Piezo Actuator Mount Cross-Section

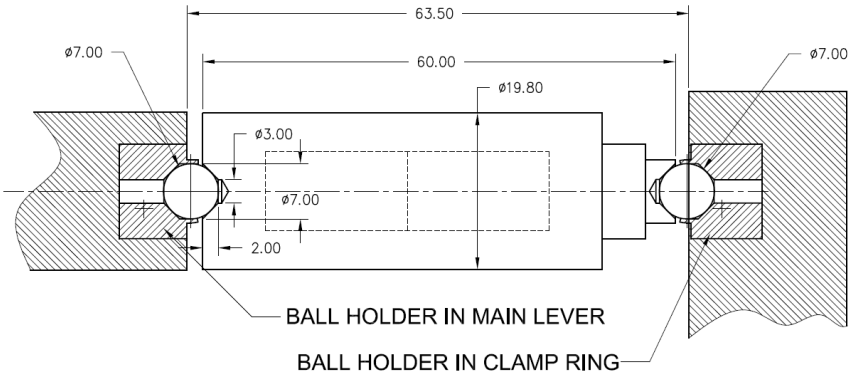

Figure 9: Piezo Capsule Mounting Detail

5 Performance

Tuner performance is commonly characterized using the following metrics.

- Efficiency
- Repeatability
- Resolution
- Pressure Sensitivity
- Mechanical Bandwidth

Efficiency represents the fraction of the force from the mechanical actuator that is actually applied to the cavity and depends on the relative stiffness of the tuner and the cavity. Resolution is a measure of how precisely the tuner is able to control the resonance frequency of the cavity. Repeatability is an indication of hysteresis and mechanical lash in the system.

Blocking force and mechanical bandwidth are only relevant to the fast tuner. The blocking force represents the maximum force a piezo actuator can work against while the mechanical bandwidth is a measure of how rapidly the fast tuner system can respond.

5.1 Efficiency

The efficiency of the tuner was evaluated using and ANSYS model to examine the distortion of the tuner under load; Figures 10 and 11 show example models used in calculations. The simulation showed that 93.7% of the actuator stroke is applied to the cavity.

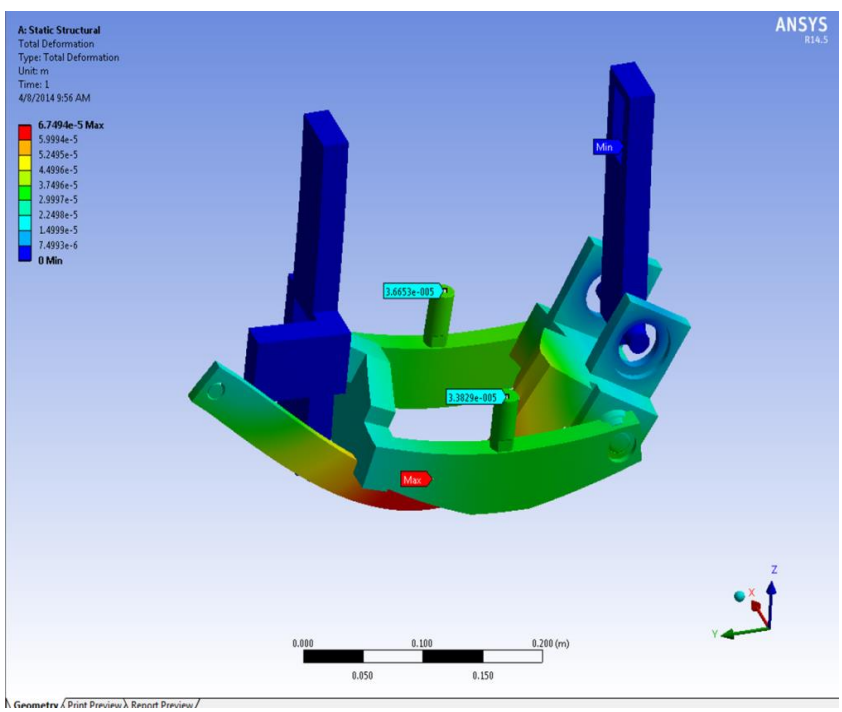

Figure 10: Distortion of the Tuner Under Load

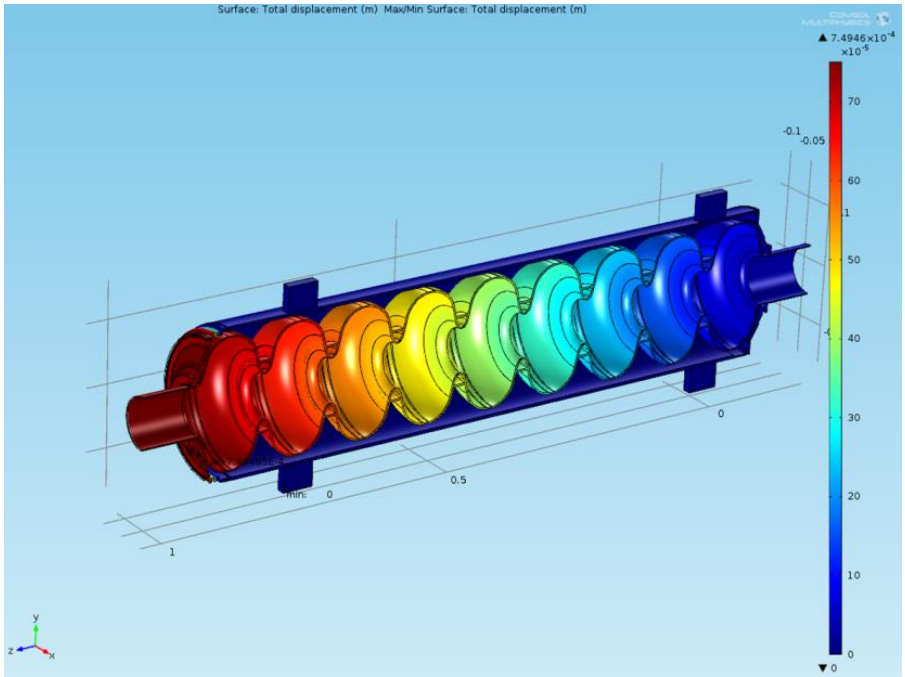

Figure 11: Static Displacement of Individual Cells During Cavity Tuning

5.2 Repeatability

The repeatability of tuning settings using the slow tuner assembly was studied during testing in the Fermilab Horizontal Test Stand of a prototype stepper-motor/planetary gear-box assembly installed on a blade-tuner equipped cavity [6]. Similar measurements were made for an XFEL style stepper-motor/harmonic-drive actuator. Both actuators exhibited lash corresponding to a hysteresis of approximately 100 Hz. Figure 12 shows example measurements.

5.3 Resolution

Figure 13 shows the measured at HTS change in the resonance frequency of the elliptical cavity as the slow tuner setting was changed in 2 step increments over a 200 Hz range. The curve shows clear evidence of hysteresis but the tuner assembly is capable of controlling the cavity resonance frequency with a resolution of 2 Hz or better.

5.4 Pressure Sensitivity

Figure 14 shows the calculated sensitivity of the unconstrained cavity resonance frequency to changes in pressure of the surrounding helium bath as a function of the radius of the helium vessel bellows. As the bellows radius increases, helium pressure changes apply a larger force across the cavity. This increases the sensitivity. The red circle indicates the sensitivity of the current design, 200 Hz/Torr.

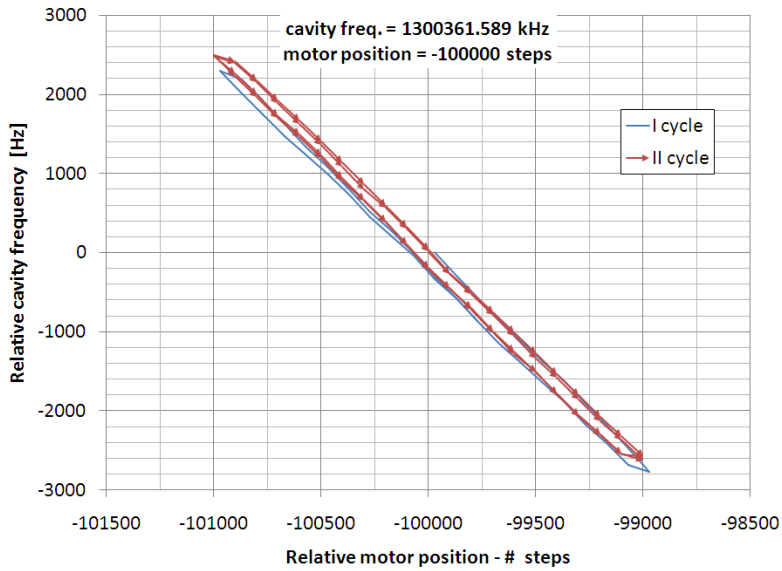

Figure 12: Short range test of Blade Tuner with harmonics drive actuator.

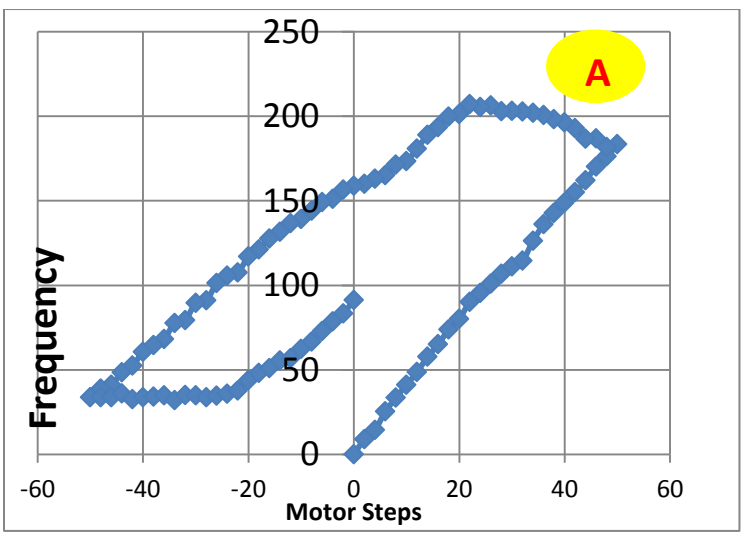

Figure 13: Slow Tuner Resolution. Tuner: Slim Blade Tuner. Actuator: Phytron actuator with 1:50 planetary gear and spindle 12X1.

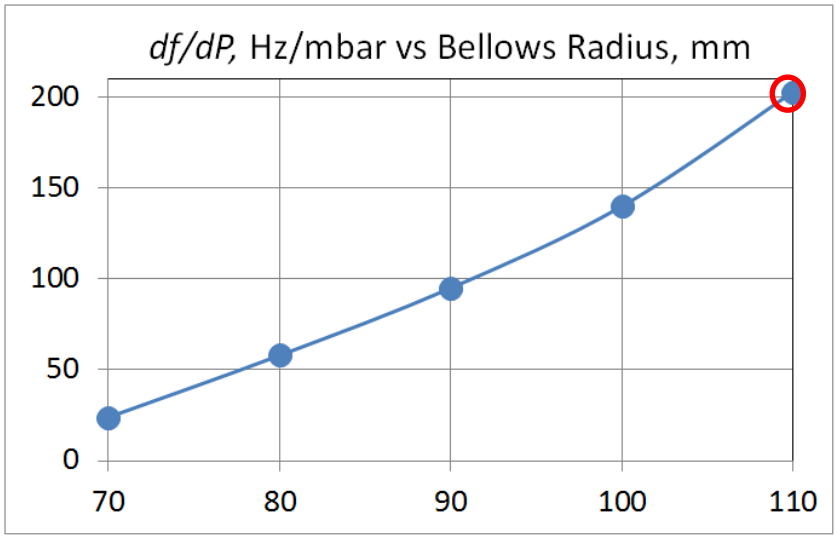

Figure 14: df/dP as a Function of Bellows Radius for the Cavity Alone

When the tuner is connected, the pressure sensitivity of the tuner/cavity assembly is much smaller. Figure 15 shows the pressure sensitivity of the assembly as a function of tuner stiffness. The shaded region on the plot indicates the expected range of stiffness. The sensitivity of the assembly should be less than 34 Hz/Torr.

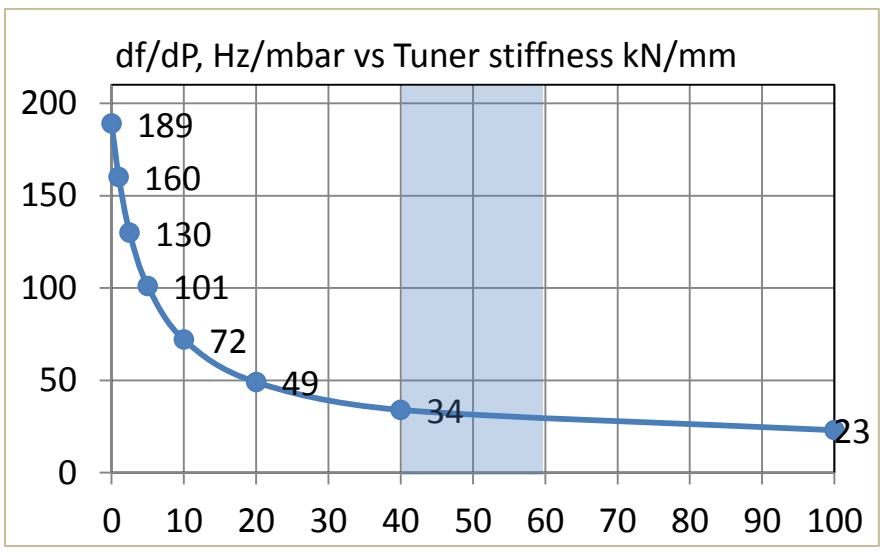

Figure 15: df/dP as a Function of Tuner Stiffness

5.5 Mechanical Bandwidth

Studies of dynamic performance are in progress.

6 Lifetime and Reliability

Tuner lifetime can be affected by a variety of factors including:

- Environment
- Operating conditions
- Component failure
- Radiation Damage

Ensuring the tuners will operate reliably for the expected LCLS-II lifetime will require both careful selection of components and extensive cold testing prior to commencement of production.

6.1 Slow Tuner

Cold vacuum is a difficult environment for electromechanical devices. Lubrication under vacuum conditions is difficult and motors can overheat if they are not protected.

The slow tuner actuator assembly, consisting of the stepper-motor/gearbox/lead-screw/nut will be purchased as a unit from Phytron and the selection of materials was made by the vendor based on lifetime requirements provided by FNAL. A prototype of the actuator assembly has been successfully operated in the FNAL/HTS for the equivalent of more than 10 LCLS-II expected lifetimes. The only degradation observed during the test was the need to modestly increase the motor current.

Further testing is planned as will be discussed below in the section on design validation testing.

6.2 Fast Tuner

In contrast with electromechanical devices, cold vacuum is an almost ideal environment for piezo actuators. Factors that can affect lifetime include:

- Environment, e.g. temperature, humidity, and voltage
- Shear forces
- Current Transients
- Radiation Damage

6.2.1 Environment

The plots in Figure 16 show the effects of temperature, voltage, and humidity on piezo actuator lifetime at room temperature. Lifetime rises exponentially as temperature and humidity fall.

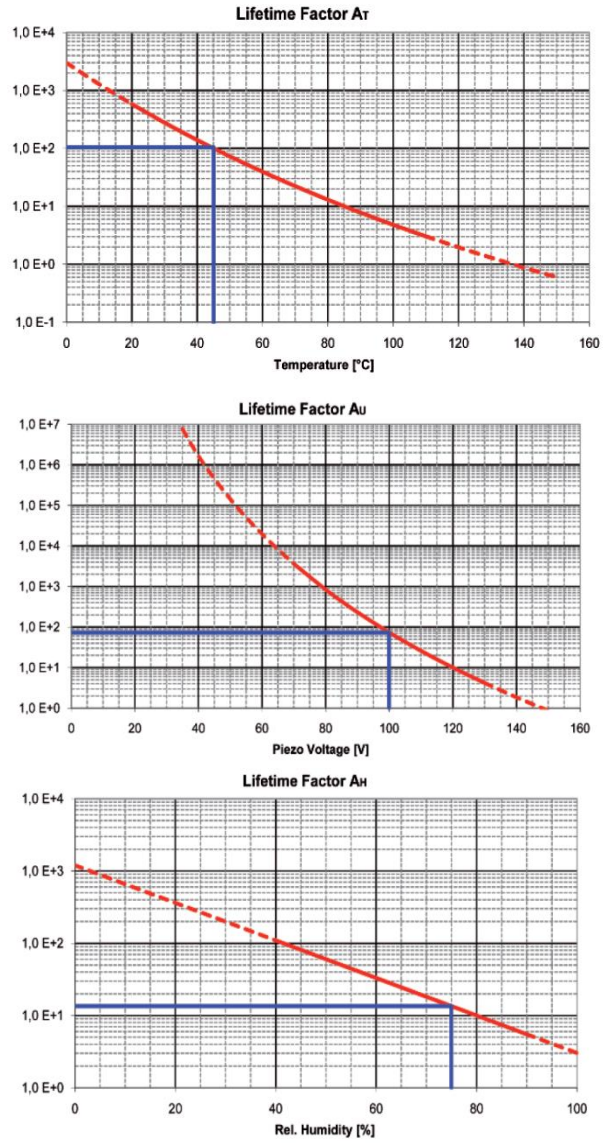

Figure 16: Room Temperature Lifetime Factors for PI-Ceramic PICMIA Piezo Actuators

6.2.2 Shear Forces

While piezo stack actuators can withstand considerable compressive forces they are susceptible to damage by shear forces. Figure 17 shows one example of such damage [7,8]. The shear forces lead to fractures of the ceramic layers within the stack. The fractures lead in turn to electrical breakdown of the layers rendering the device inoperable.

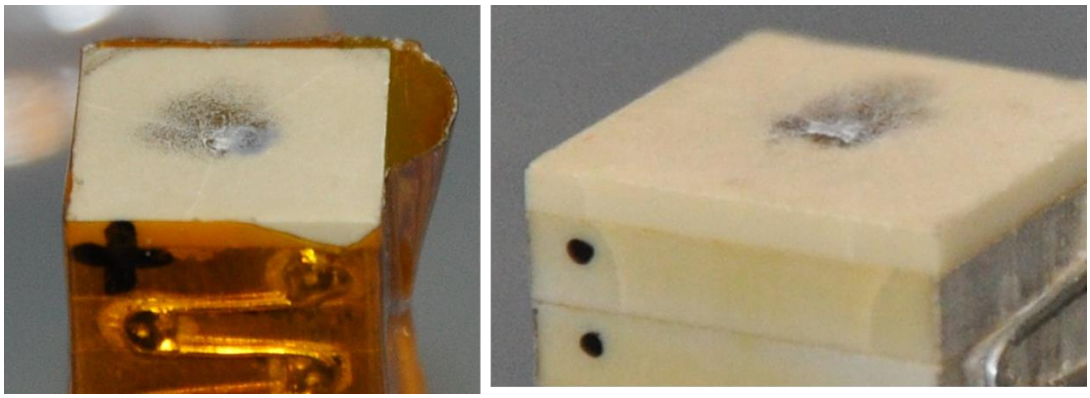

Figure 17: Fracture damage to the endplate of the piezo as a result of excessive shear forces.

The piezo manufacturer recommends that actuator mounts be designed to prevent the transmission of any shear forces to the stacks. Current plans call for the LCLS-II tuners to use piezo actuators encapsulated by the manufacturer to preclude any such damage.

6.2.3 Current Transients

While piezo actuators have proven highly reliable during operation of the FLASH FEL at DESY [9], there remain concerns that mechanical shocks caused by rapid current transients may lead to fractures. Establishing suitable operating limits for the actuators will require testing.

6.2.4 Radiation Damage

The IPN/Orsay group has measured the degradation due to neutron radiation of piezo actuators from several manufacturers [10]. Included in their study were the PICMIA actuators manufactured by PI Ceramic that have been selected for the LCLS-II tuner.

The Orsay group concluded "no major damage was observed but slight performance degradation may be due to aging effect, is measured: these piezostacks are suited for use in cryogenic and neutrons radiation environment up to a total dose ~ 7.10^{14} n/cm^{2}" ($5x10^{4}$ Gy @ 1 MeV).

Radiation damage to cable insulation may also be a concern. Radiation damage thresholds for insulation published by NASA range between 10^{3} Gy for Teflon and $5x10^{7}$ Gy for Kapton [11].

Further studies using gamma sources available at FNAL are planned to establish damage limits on the LCLS-II piezo actuators. Even with such studies, it will be difficult to make definitive statements about the effects of radiation on tuner lifetime until estimates of the tuner radiation environment become available.

7 Alternative Designs

Several methods of mechanical tuning of superconducting cavities have been used. A mechanical actuator physically applies a force along the length of the cavity. The force distorts the cavity cells changing their resonance frequency. A variety of actuators have been employed but most tuners use a stepper-motor/gearbox/lead-screw to provide static tuning the cavity following cool-down in combination with a piezo actuator to provide dynamic tuning during operation.

Several distinctly different mechanical tuners have been developed for nine-cell 1.3 GHz elliptical cavities. During S1 Global project cryomodule with 8 elliptical cavities was assembled and tested [8]. S1 global project provided unique opportunity to test/evaluate inside the cryomodule three different types of tuners:

1. Saclay Lever Tuner
2. INFN Blade Tuner
3. KEK Slide Jack Tuner

The Saclay tuner has been used successfully for a number of years at the FLASH FEL and has been selected for the European XFEL. The INFN blade tuner and KEK slide jack tuner were developed as potential alternatives for the ILC but have never been used in a working accelerator.

The LCLS-II tuner is a modified version of the Saclay-I tuner used by the FLASH XFEL at DESY and by the European XFEL but incorporates modifications intended to:

1. Accommodate mechanical differences between the LCLS-II cavities and FLASH cavities
2. Provide finer control of the cavity resonance frequency
3. Allow tuner components to be replaced via an access port in the side of the cryomodule

Modifications include changes to the following:

- Detailed design
- Stepper Motor/Gearbox/Lead-screw Assembly
- Piezo Actuator mounting

7.1 Design

The LCLS-II tuner design closely follows that of the Saclay-I tuner is show in Figure 18.

Design modifications include:

- Re-dimensioning components to eliminate physical interference with the HOM couplers on the short beam-flange cavities that will be used to construct the two prototype cyromodules.
- Repositioning the piezo actuators to allow access to both the motor and the piezos from a single port in the cryomodule pressure vessel.
- Positioning the piezo actuators to operate directly on the cavity support ring instead of through the lever system to reduce the possibility of bearing “stiction” during dynamic detuning compensation. This is intended to allow more precise control of detuning, which is important given the narrower half-bandwidth of the LCLS-II cavities (30 Hz) when compared to the XFEL cavities (200 Hz).

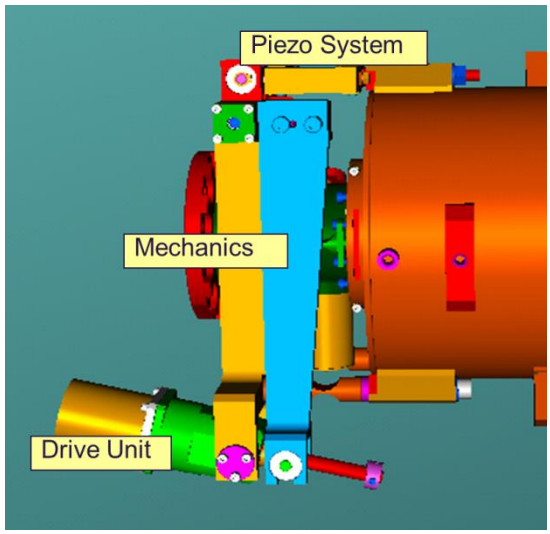

Figure 18: Saclay-I Tuner

7.2 Motor/Gearbox/Lead-screw Assembly

A comparison of the LCLS-II and the Saclay tuners used at FLASH and the XFEL is given in Table 4. The FLASH and XFEL tuners use an electromechanical actuator consisting of a Sanyo stepper-motor designed for room temperature operation in combination with a planetary gearbox and a copper-beryllium lead-screw. Each motor must be disassembled and modified for operation in cold vacuum. Components must be coated with a molybdenum-disulfide based dry lubricant.

The slow actuator for the LCLS-II tuner consists of an integrated vacuum rated stepper-motor/planetary-gearbox/lead-screw assembly manufactured by Phytron to specifications provided by FNAL. Differences in the design and materials between the two actuators reflect the vendor's professional judgment and experience as to the best way to construct a device that will provide reliable operation over the expected lifetime of the machine. The reliability of the Phytron product has been confirmed by extensive cold testing in the FNAL HTS.

Table 4: A Comparison of the LCLS-II and XFEL Slow Tuner Electro-mechanical Actuator Assemblies

	Stepper Motor	Gearbox		Lead Screw		Coating	Force	Range	Lifetime
		Type	Ratio	Material	Coating				
Units							**N**	**kHz**	**Turns**
XFEL	Sanyo	Harmonic	1:50	Cu-Be	M12x1	MoS_2	400	2.5	3000
LCLS-II	Phytron	Planetary	1:50	Stainless	M12x1	WS_2	400	2.5	6500

Figure 19 and Figure 20 respectively show harmonic drive gearboxes damaged after 1500 spindle rotations during testing in the Fermilab Horizontal Test Stand and during operation at the Oak Ridge SNS.

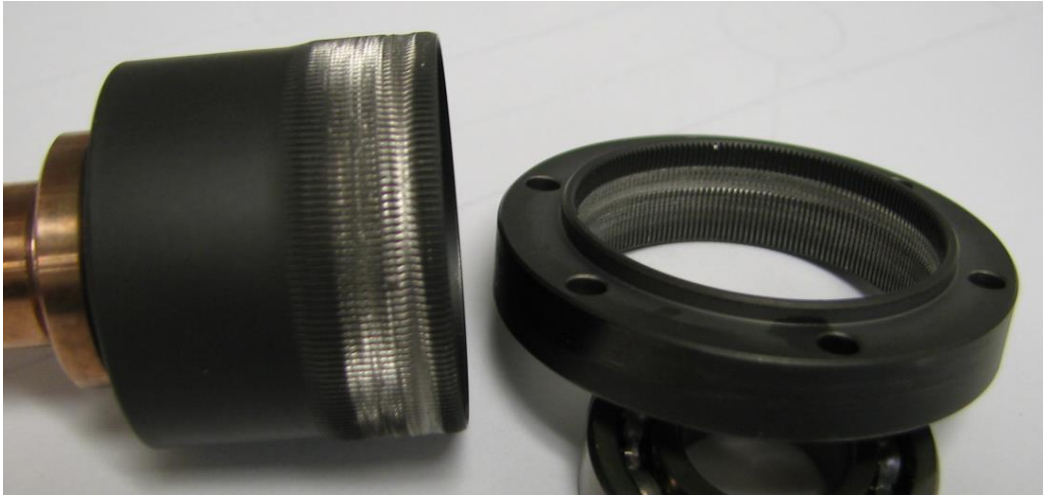

Figure 19: Harmonic Drive Damaged During Testing at FNAL/HTS

Figure 20: Harmonic Drive Damage at SNS

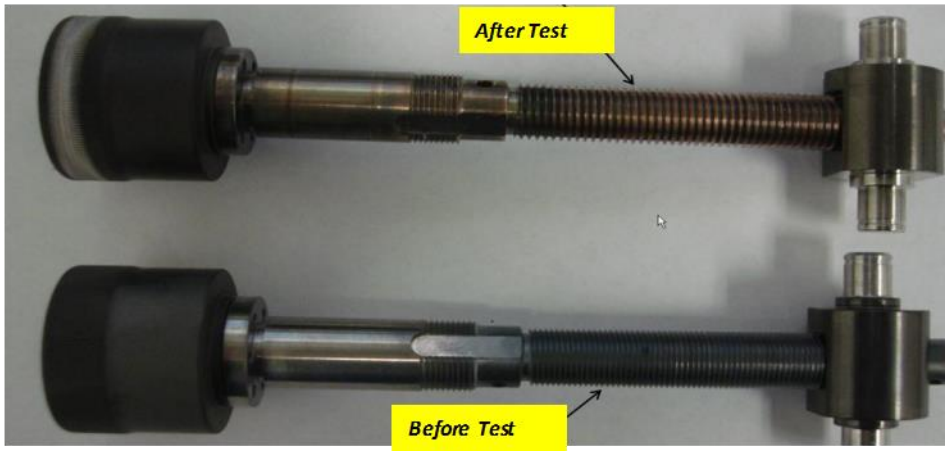

Figure 21: CuBe shaft/spindle attached to the flex spline of harmonics drive. On the bottom brand new "spindle-flex spline"; on the top spindle after 30Msteps of stepper motor or

1500spindle rotation. After 1500 spindle rotations the dry lubrication on the spindle has gone and teeth on the flex spline have been eroded .

Figure 21 shows a picture of two CuBe shafts. The upper shaft has been operated for 1500 spindle rotations in the Fermilab HTS while the lower shaft is unused. During testing the dry lubricant on the upper shaft wore away leading to significant wear of the thread.

A prototype of the Phytron actuator assembly has been successfully operated in the FNAL/HTS for 6500 spindle rotations, the equivalent of more than 6.5 LCLS-II expected lifetimes. The only degradation observed during the test was the need to modestly increase the motor current.

7.3 Piezo Actuator

While the piezo actuators that will be used for both the European XFEL, and for LCLS-II are manufactured by PI Ceramic, the assemblies for the actuators are very different. The XFEL actuators are mounted in a stainless-steel C-clamp as shown in Figure 22. The LCLS-II tuner employs piezo stack actuators encapsulated in a stainless-steel housing designed to prevent transmission of shear forces to the stack and to provide a suitable preload.

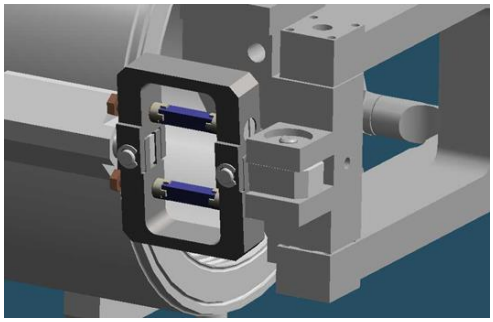

Figure 22: FLASH/XFEL Fast Tuner Assembly

8 Testing and Quality Assurance

Cavity tuners are critical to successful operation of the LCLS-II cryomodules and comprehensive testing of the design, tuner components, and integrated tuner assemblies are critical for successful operation of the tuners.

The tuner testing and quality assurance program consists of three major components aimed at addressing three different goals.

- Design Validation
- Component Acceptance Testing
- Integrated Tuner Assembly Testing

The first component of this program consists of a combination of destructive and non-destructive testing directed at validating the performance and lifetime of the tuner design prior to the commencement of production cryomodules. The second component of this program consists of a combination of

destructive and non-destructive testing directed at verifying that each of the individual tuner components satisfies the respective requirements laid down in the design prior to their installation in the production cryomodules. The final component of this program consists of non-destructive testing directed at ensuring that each of the integrated tuner assemblies meets the performance and lifetime requirements following installation in the cryomodule.

8.1 Design Validation

The tuner design validation testing program consists of destructive and non-destructive testing directed at validating the fundamental design will meet the requirements for successful operation with respect to the following.

- Performance
- Lifetime and Reliability
- Magnetic Field
- Radiation Hardness

All design validation test results will be fully documented and subject to independent review prior to the commencement of production.

8.2 Component Acceptance Testing

The component acceptance testing program consists primarily of non-destructive testing directed at validating the each of the following tuner components meets the requirements for successful operation.

- Stepper Motor/Gearbox
- Piezo Actuators

As these components are received from vendors, each unit will be subject non-destructive tests designed to ensure that can meet the requirements for successful operation prior to installation in the cryomodule.

Acceptance tests may include

- Visual inspection for damage
- Measurements of motor coil resistances
- Capacitance measurements of piezo actuator
- Operation actuators in an automated test stand
- Magnetic measurements

The final test regimen for each component will established once the results of the destructive testing conducted during the design validation stage are available.

In addition, some as-yet-to-be-determined fraction of each production run may be diverted for destructive testing similar to that conducted during design validation testing.

All component acceptance test results will be recorded in a database for future reference.

8.3 Integration Testing

The integration testing program consists of non-destructive testing directed at validating that the final tuner assembly meets the requirements for successful operation following installation in the cryomodule.

- Integration tests may include
  - Visual inspection for damage
  - Measurements of motor coil resistances
  - Capacitance measurements of piezo actuator
  - Operation actuators in-situ
  - Magnetic measurements

The final regimen for integration testing will established once the results of the destructive testing conducted during the design validation stage are available.

All integration test results will be recorded in a database for future reference.

9 References

1. C.Pagani "TTF Tuner Development: Saclay and INFN-Blade" 2005 ILC Workshop, Snow mass, Colorado, 2005
2. P.Pertsch, et al. " DC- AND AC-SIGNAL RELIABILITY OF PIEZOELECTRIC MULTILAYER ACTUATORS" ACTUATOR 2010 conference, Bremen Germany, 2010
3. http://stm8.artov.isc.cnr.it/BepiColombo/.
4. http://www.pi-usa.us/technotes/PI_Piezoactuator_Cryogenic_Temperature_Superconducting_Cavity_10_Years_LifeTimeTestReportC.pdf
5. http://www.pi-usa.us/pdf/Piezo_Actuator_Lifetime_Tests_Picma.pdf
6. A. Bosotti, et al. , FULL CHARACTERIZATION OF THE PIEZO BLADE TUNER FOR SUPERCONDUCTING RF CAVITIES, PAC2009
7. Y. Pischalnikov, et al. "TEST OF A COAXIAL BLADE TUNER AT HTS/FNAL"PAC2011, New York, NY, USA 2011
8. S1-Global Report, KEK Report 2013-3, May 2013.
9. M.Grecki et al., "Piezo Characterization, tests and operation at FLASH", LLRF2013, Lake Tahoe, CA, USA, 2013
10. M. Fouaidy, et al., ELECTROMECHANICAL, THERMAL PROPERTIES AND RADIATION HARDNESS TESTS OF PIEZOELECTRIC ACTUATORS AT LOW TEMPERATURE IPN 91406 Orsay- France
11. http://nepp.nasa.gov/npsl/wire/insulation_guide.htm

Wong, Theresa

From: Evgueni R Borissov <borissov@fnal.gov>
Sent: Tuesday, August 05, 2014 11:01 AM
To: Wong, Theresa
Subject: RE: NEED APPROVAL - EN "LCLS-II Cavity Tuner Electro-mechanical Design" (LCLSII-4.5-EN-0221-R0)

I approve the document

Evgueni

From: Wong, Theresa [wongt@slac.stanford.edu]
Sent: Monday, August 04, 2014 11:00 AM
To: Evgueni R Borissov; Warren Schappert; Yuriy M Pischalnikov
Cc: Darren Marsh; jncorlett@lbl.gov; Wong, Theresa
Subject: NEED APPROVAL - EN "LCLS-II Cavity Tuner Electro-mechanical Design" (LCLSII-4.5-EN-0221-R0)

Dear All,

"LCLS-II Cavity Tuner Electro-mechanical Design" EN is being prepared for release. Please review the attached electronic version and let me know if you approve via email. Once I have all your approvals, I will release the document.

Thanks,

Theresa Wong
LCLS-II Project Administrator
SLAC National Accelerator Laboratory
2575 Sand Hill Rd MS 52
Menlo Park, CA 94025
T: (650) 926-4077
F: (650) 926-5368

Wong, Theresa

From: Warren Schappert <warren@fnal.gov>
Sent: Tuesday, August 05, 2014 8:38 AM
To: Wong, Theresa; Evgueni R Borissov; Yuriy M Pischalnikov
Cc: Marsh, Darren S.; jncorlett@lbl.gov
Subject: RE: NEED APPROVAL - EN "LCLS-II Cavity Tuner Electro-mechanical Design" (LCLSII-4.5-EN-0221-R0)

I approve the document
Warren

From: Wong, Theresa [mailto:wongt@slac.stanford.edu]
Sent: Monday, August 04, 2014 11:00 AM
To: Evgueni R Borissov; Warren Schappert; Yuriy M Pischalnikov
Cc: Darren Marsh; jncorlett@lbl.gov; Wong, Theresa
Subject: NEED APPROVAL - EN "LCLS-II Cavity Tuner Electro-mechanical Design" (LCLSII-4.5-EN-0221-R0)

Dear All,

"LCLS-II Cavity Tuner Electro-mechanical Design" EN is being prepared for release. Please review the attached electronic version and let me know if you approve via email. Once I have all your approvals, I will release the document.

Thanks,

Theresa Wong
LCLS-II Project Administrator
SLAC National Accelerator Laboratory
2575 Sand Hill Rd MS 52
Menlo Park, CA 94025
T: (650) 926-4077
F: (650) 926-5368

Wong, Theresa

From: Yuriy Pischalnikov <pischaln@fnal.gov>
Sent: Monday, August 04, 2014 9:10 AM
To: Wong, Theresa; borissov@fnal.gov; warren@fnal.gov
Cc: Marsh, Darren S.; jncorlett@lbl.gov
Subject: Re: NEED APPROVAL - EN "LCLS-II Cavity Tuner Electro-mechanical Design" (LCLSII-4.5-EN-0221-R0)

Dear Theresa,

I approved EN"LCLS-II Cavity Tuner Electro-mechanical Design" for release.

Thank,
Yuriy Pischalnikov

On 8/4/2014 11:00 AM, Wong, Theresa wrote:

> Dear All,
>
> "LCLS-II Cavity Tuner Electro-mechanical Design" EN is being prepared for release. Please review the attached electronic version and let me know if you approve via email. Once I have all your approvals, I will release the document.
>
> Thanks,
>
> Theresa Wong
> LCLS-II Project Administrator
> SLAC National Accelerator Laboratory
> 2575 Sand Hill Rd MS 52
> Menlo Park, CA 94025
> T: (650) 926-4077
> F: (650) 926-5368