Experiments with Neutron Induced Neutron Emission

Y. DANON on behalf or the RPI/NNL cross section group

Professor and Director Gaerttner LINAC Center
Nuclear Engineering Program Director
Department of Mechanical, Aerospace and Nuclear Engineering
Rensselaer Polytechnic Institute, Troy, NY, 12180

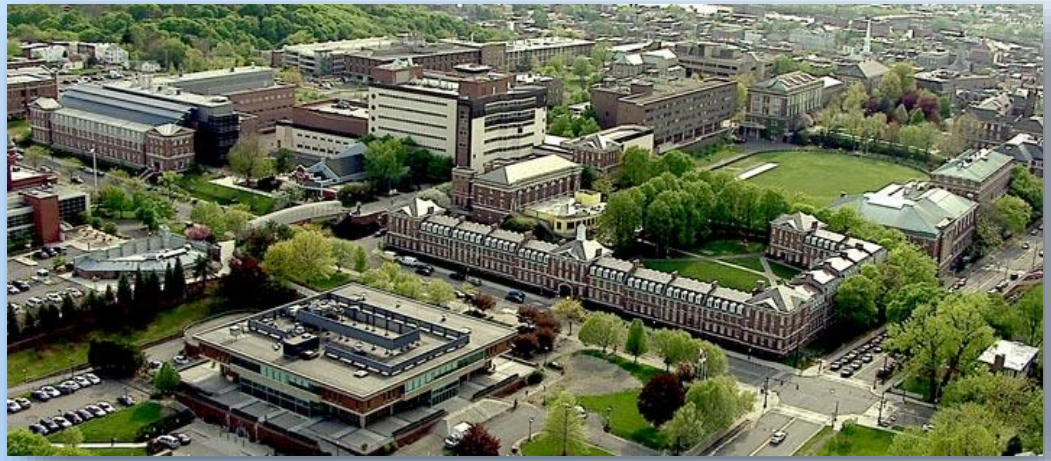

WANDA 2021, January 25 - February 3, 2021, online

Rensselaer

NCSP
NUCLEAR CRITICALITY SAFETY PROGRAM

NAVAL NUCLEAR LABORATORY

linac The Gaerttner LINAC Center

Neutron Induced Neutron Emission

How is it done:

1. Use a pulsed "white" neutron beam with a neutron time of flight setup and sample to source distance L_1
2. Position multiple neutron detectors at different angles around the sample at distance L_2
3. Measure neutrons emission from the sample using surrounding detectors
4. Compare the measurements to detailed simulations (use a carbon reference sample)

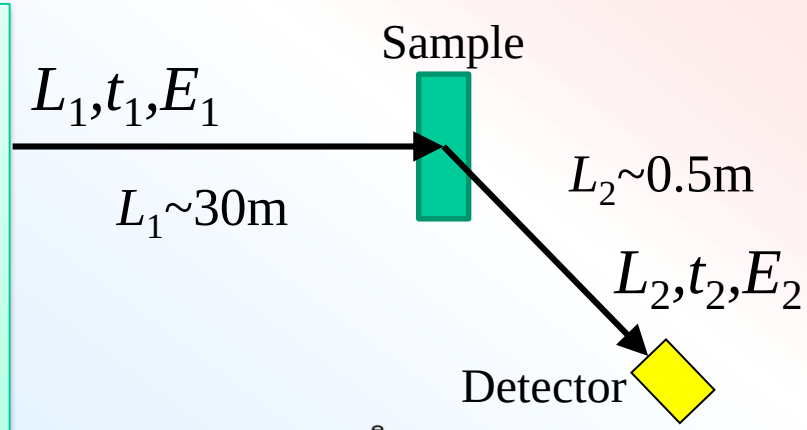

Keep it simple

- Relatively simple experiment
- Can use thick samples to induce more collisions
- Can use different sample geometries
- Use fast or keV neutron detectors

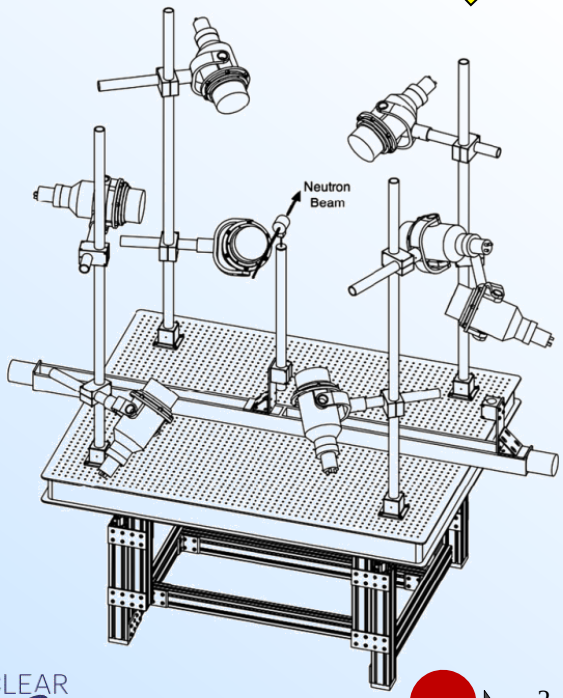

Nuclear Data

- Requires time dependent simulation codes
- Sensitive to the scattering (or fission) cross sections and angular distributions
- Requires good physics in the transport code. (currently fission neutron angular distributions are missing from MCNP)
- Was used to improve U-238 angular distributions and cross section in ENDF/B-8.0

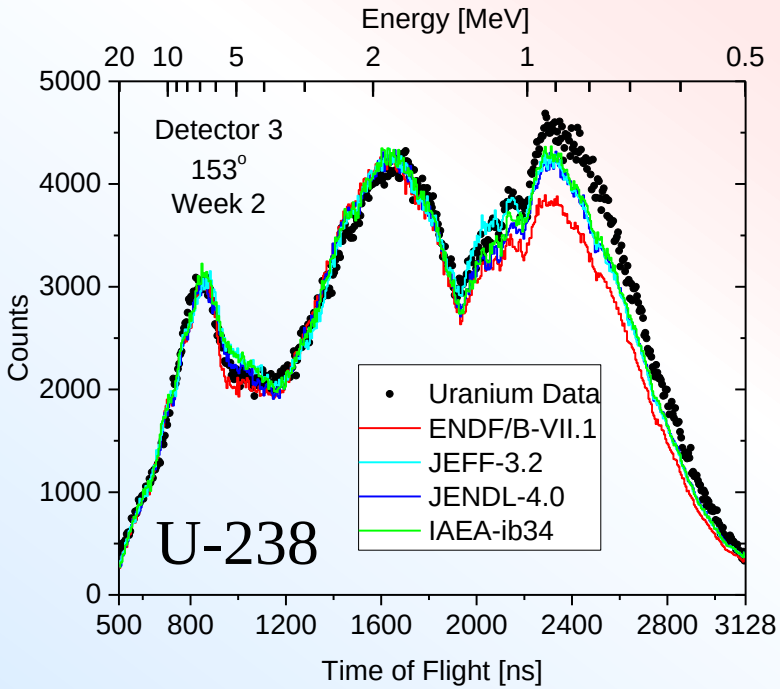

Detector Efficiency Prob. to Interact Prob. to scatter/fission

$$Y(E,\varphi) \propto \eta(E')\Phi(E)\left(1-e^{\Sigma_t(E)L}\right)\frac{\sigma_{s,f}}{\sigma_t}\frac{f(E,\varphi)}{2\pi}+Y_{MS}(E)+B(E)$$

Contributions from:
Multiple scattering
Background and room return

Incident Flux Probability to Scatter in direction φ

Making it a benchmark

- The experimental uncertainty is in the interpretation of the experiment:
  - Neutron flux shape
  - Detector efficiency shape
  - Documentation of geometry
  - Background and room return
  - Gamma contamination
  - Accuracy of carbon reference cross sections
- **Typical systematic uncertainty is of the order of 5%**
- Can be compiled to Shielding Integral Benchmark Archive and Database (SINBAD) or International Criticality Safety Benchmark Evaluation Project (ICSBEP)
- Experiments were performed for Be, Mo, Fe, Pb, Cu, Zr, U-238, U-235, Pu-239

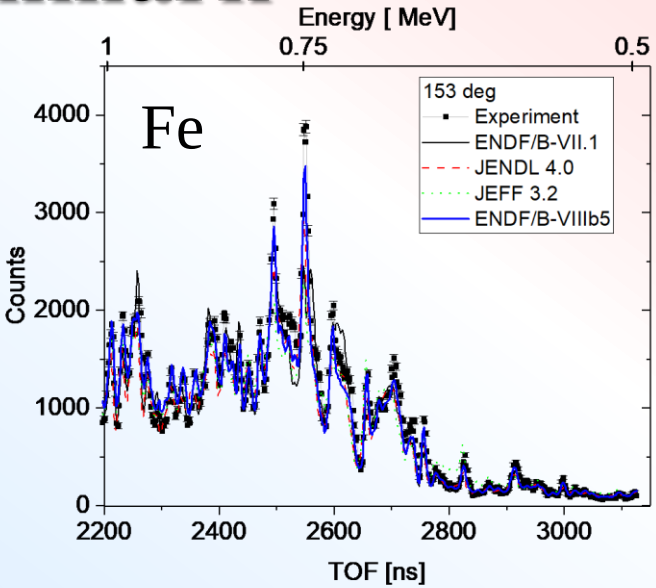

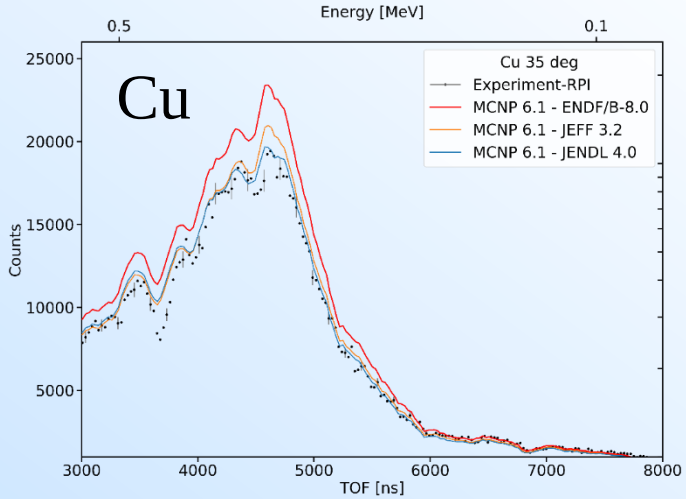

Scattering Related Group Publications

- **Journal**
  - A. M. Daskalakis, E. J. Blain, B. J. McDermott, R. M. Bahran, Y. Danon, D. P. Barry, R. C. Block, M. J. Rapp, B. E. Epping and G. Leinweber, **"Quasi-differential elastic and inelastic neutron scattering from iron in the MeV energy range**", Annals of Nuclear Energy, vol. 110, pp. 603 - 612, 2017.
  - E. Blain, A. Daskalakis, R.C. Block, D. Barry, Y. Danon, "***A method to measure prompt fission neutron spectrum using gamma multiplicity tagging***", Nuclear Instruments and Methods in Physics Research Section A: Accelerators, Spectrometers, Detectors and Associated Equipment, Volume 805, Pages 95-100, 1 January 2016, (invited: Special Issue in memory of Glenn F. Knoll).
  - A.M. Daskalakis, R.M. Bahran, E.J. Blain, B.J. McDermott, S. Piela, Y. Danon, D.P. Barry, G. Leinweber, R.C. Block, M.J. Rapp, R. Capote, A. Trkov, "***Quasi-differential neutron scattering from 238U from 0.5 to 20 MeV***", Annals of Nuclear Energy, Volume 73, Pages 455-464, November 2014.
  - R. Capote, A. Trkov, M. Sin M. Herman, A. Daskalakis, and Y. Danon, "***Physics of Neutron Interactions with ^{238}U: New Developments and Challenges***", Nuclear Data Sheets 118, 26–31, (2014).
  - D. P. Barry, G. Leinweber, R. C. Block, and T. J. Donovan, Y. Danon, F. J. Saglime, A. M. Daskalakis, M. J. Rapp, and R. M. Bahran, "***Quasi-differential Neutron Scattering in Zirconium from 0.5 MeV to 20 MeV***", Nuclear Science and Engineering, 174, 188–201, (2013).
  - R.Dagan, B. Becker, Y. Danon, "***A complementary Doppler Broadening formalism and its impact on nuclear reactor simulation***", Kerntechnik 3, Page 185-189, (2011).
  - Frank J. Saglime III, Yaron Danon, Robert C. Block, Michael J. Rapp, Rian M. Bahran, Greg Leinweber, Devin P. Barry, Noel J. Drindak, and Jeffrey G. Hoole, "***A system for differential neutron scattering experiments in the energy range from 0.5 to 20 MeV***", Nuclear Instruments and Methods in Physics Research Section A, 620, Issues 2-3, Pages 401-409, (2010).
- **Conference Proceedings**
  - Y. Danon, "**Experiments with Neutron Induced Neutron Emission from U-235, Pu-239, and Graphite**", 2019 International Conference on Nuclear Data for Science and Technology (ND2019), Beijing China, May 2019.
  - Daskalakis, Adam, Blain, Ezekiel, Leinweber, Gregory, Rapp, Michael, Barry, Devin, Block, Robert and Danon, Yaron, "**Assessment of beryllium and molybdenum nuclear data files with the RPI neutron scattering system in the energy region from 0.5 to 20 MeV**", EPJ Web Conf., vol. 146, pp. 11037, 2017
  - R. Capote, A. Trkov, M. Sin, M. W. Herman, P. Schillebeeckx, I. Sirakov, S. Kopecky, D. Bernard, G. Noguere, A. Daskalakis and Y. Danon, "**U-238 evaluation and validation of the neutron induced reactions up to 20 MeV**", ND 2016 International Conference on Nuclear Data for Science and Technology, Bruges, Belgium,, 11-16, September 2016
  - K. Mohindroo, E. Blain, Y. Danon, S. Mosby and M. Devlin, "**Quasi-differential neutron induced neutron emission reaction measurements at WNR**", ransactions of the American Nuclear Society, vol. 115, pp. 701-703, 2016
  - A. M. Daskalakis, E. J. Blain, B. J. McDermott, R. M. Bahran, Y. Danon, D. P. Barry, G. Leinweber, M. J. Rapp, R. C. Block, "***Separation of Neutron Inelastic and Elastic Scattering Contribution from Natural Iron using Detector Response Functions***", 12th International Topical Meeting on Nuclear Applications of Accelerators (AccApp '15), Washington D.C., November 2015.
  - Amanda E. Youmans, J. Brown, A. Daskalakis, N. Thompson, A. Welz, Y. Danon, B. McDermott, G. Leinweber, M. Rapp, "***Fast Neutron Scattering Measurements with Lead***", 12th International Topical Meeting on Nuclear Applications of Accelerators (AccApp '15), Washington D.C., November 2015
  - Y. Danon, L. Liu, E.J. Blain, A.M. Daskalakis, B.J. McDermott, K. Ramic, C.R. Wendorff, D.P. Barry, R.C. Block, B.E. Epping, G. Leinweber, M.J. Rapp, T.J. Donovan, "***Neutron Transmission, Capture, and Scattering Measurements at the Gaerttner LINAC Center***", Transactions of the American Nuclear Society, Vol. 109, p. 897-900, Washington, D.C., November 10–14, 2013
  - Adam M. Daskalakis, Rian M. Bahran, Ezekial J. Blain, Brian J. McDermott, Sean Piela, Yaron Danon, Devin P. Barry, Greg Leinweber, Robert C. Block, Michael J. Rapp, "***Quasi-Differential Neutron Scattering Measurements of ^{238}U***", ANS Winter Meeting and Nuclear Technology Expo, American Nuclear Society, San Diego CA. November 11-15, 2012.
  - Frank J. Saglime III, Yaron Danon, Robert C. Block, Michael J.Rapp, and Rian M. Bahran, Devin P. Barry, Greg Leinweber, and Noel J. Drindak, "***High Energy Neutron Scattering Benchmark of Monte Carlo Computations***", International Conference on Mathematics, Computational Methods & Reactor Physics (M&C 2009), Saratoga Springs, New York, May 3-7, 2009, on CD-ROM, American Nuclear Society, LaGrange Park, IL (2009).
  - Frank J. Saglime III, Yaron Danon, Robert Block, "***Digital Data Acquisition System for Time of Flight Neutron Beam Measurements***", The American Nuclear Society's 14th Biennial Topical Meeting of the Radiation Protection and Shielding Division, p. 368, Carlsbad New Mexico, USA. April 3-6, 2006.