PDu-150 Piezo amplifier

B. Chase

June 8, 2015

Resonance control chassis layout

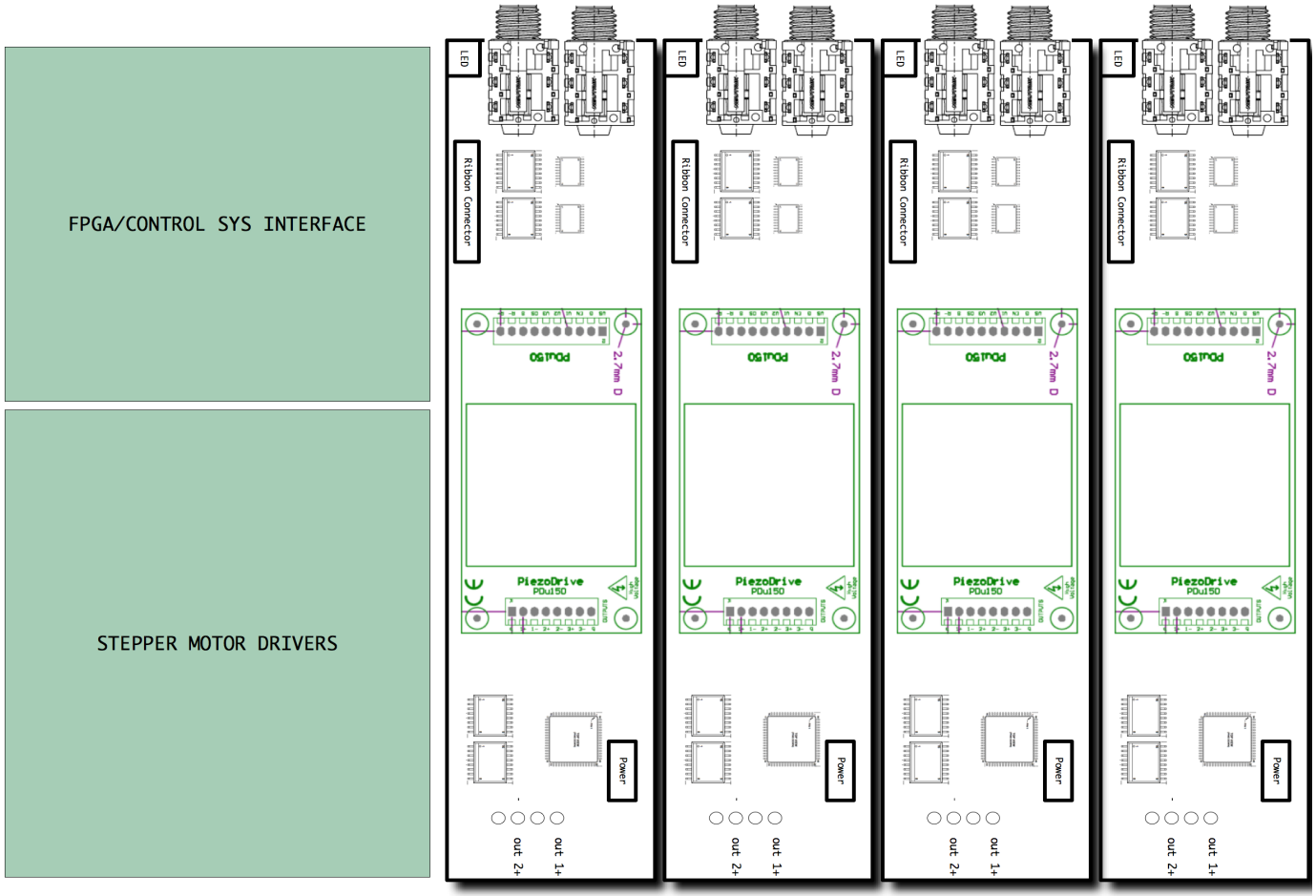

PiezoDrive PDu150 three channel Ultra-low noise

Specifications

Specifications	
Power Supply	+24 V, Ground
Output Voltage	-30 V to +150 V
Peak Current	100 mA (300 mA single channel)
RMS Current	78 mA (235 mA single channel)
Power Bandwidth	80 kHz (150 Vp-p)
Signal Bandwidth	180 kHz
Slew Rate	38 V/us
Gain	20 V/V
Input Impedance	110 kOhm (Input), 3.3 kOhm (Offset)
Input Offset	+/- 5 mV
Load	Unlimited
Output Noise	26 uV RMS (1 uF load, 0.03 Hz to 1 MHz)
Protection	Short circuit, over-current, and temperature
Quiescent Current	100 mA (10 mA in shutdown)
Connectors	Screw terminals (AWG 20-30)
Dimensions	76 x 40 x 37 mm (L x W x H)
Environment	-40C to 60C (-40F to 140F)
Weight	80 gram

Load Cap.	Bandwidth
No Load	180 kHz
10 nF	105 kHz
30 nF	40 kHz
100 nF	11 kHz
300 nF	3.8 kHz
1 uF	1.0 kHz
3 uF	320 Hz
10 uF	62 Hz
30 uF	24 Hz

Small signal bandwidth versus load capacitance (-3dB)

10 kHz sine wave input, 9.5 V pp
Output 189 V pp. C=0.0uF

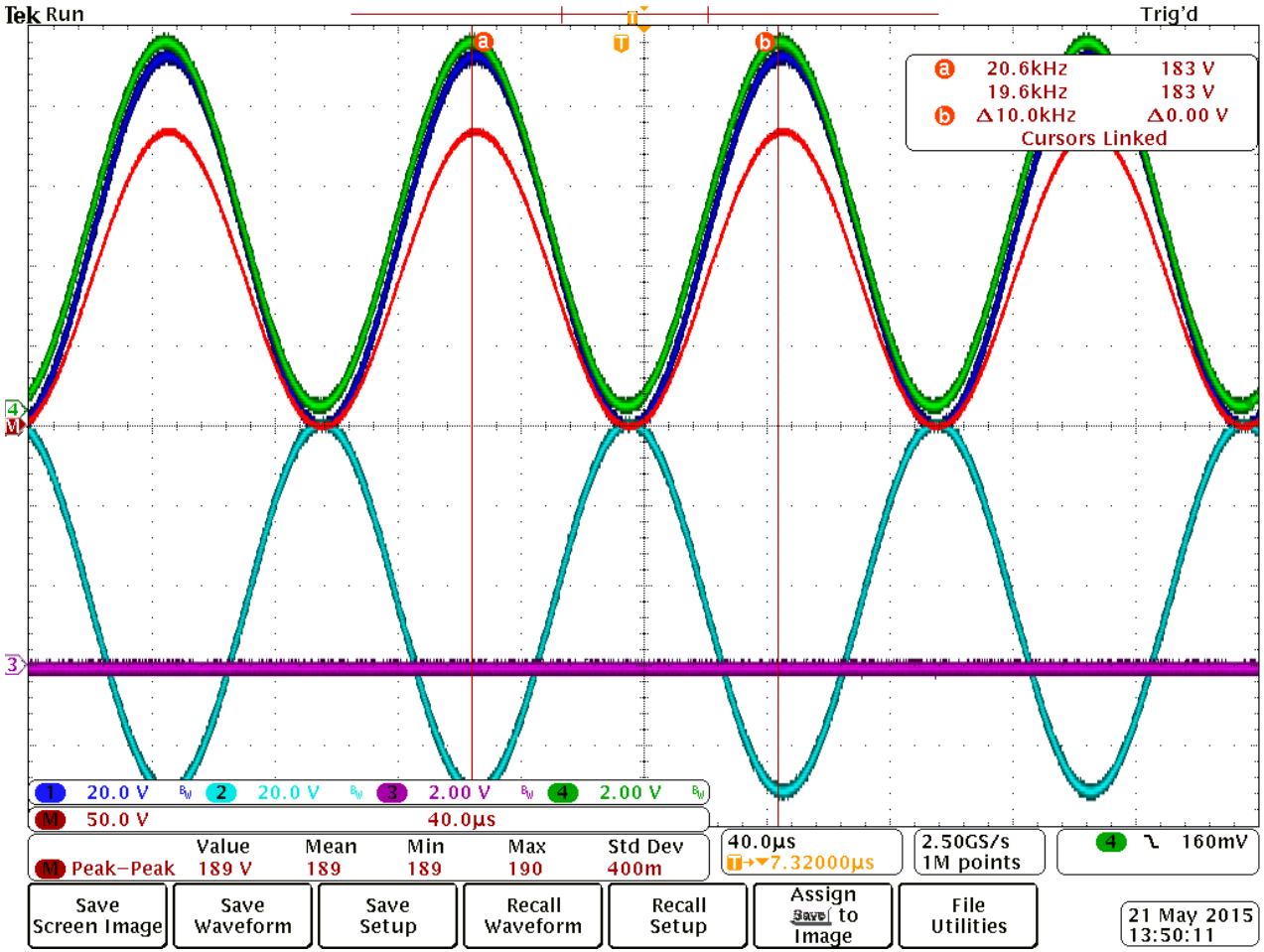

Ch 1 out+
Ch 2 out-
Ch 4 Vin
M out+ - out-

No visible distortion
or phase shift
G=20V/V

P.S. = 23.4 Vdc

180 kHz sine wave input, 1.8 V pp
Output 24 V pp. C=0.0uF

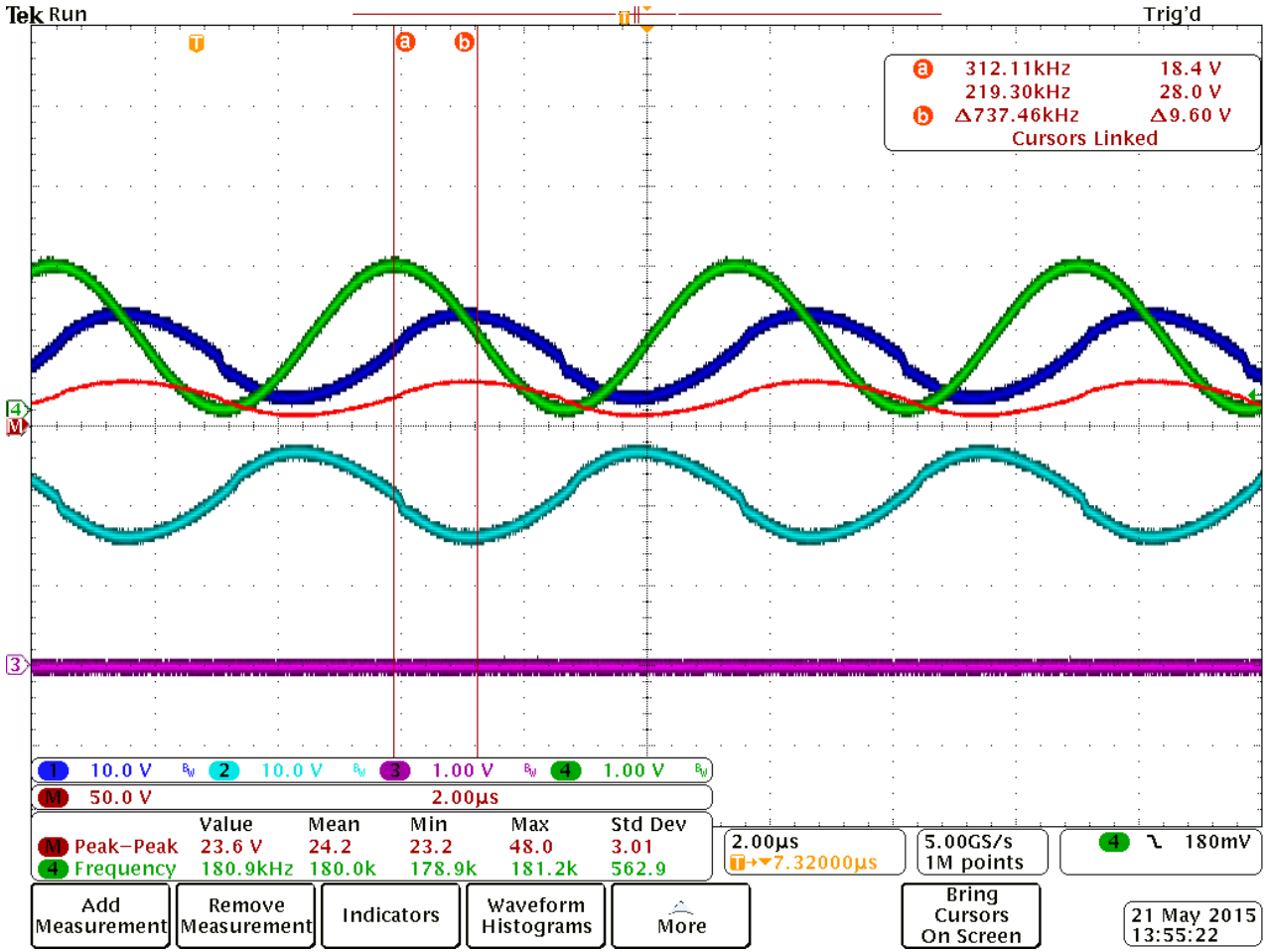

Ch 1 out+
Ch 2 out-
Ch 4 Vin
M out+ - out-

visible crossover distortion
~90 phase shift

1 kHz sine wave input, 1.8 V pp
Output 10 V pp. C=1.0uF

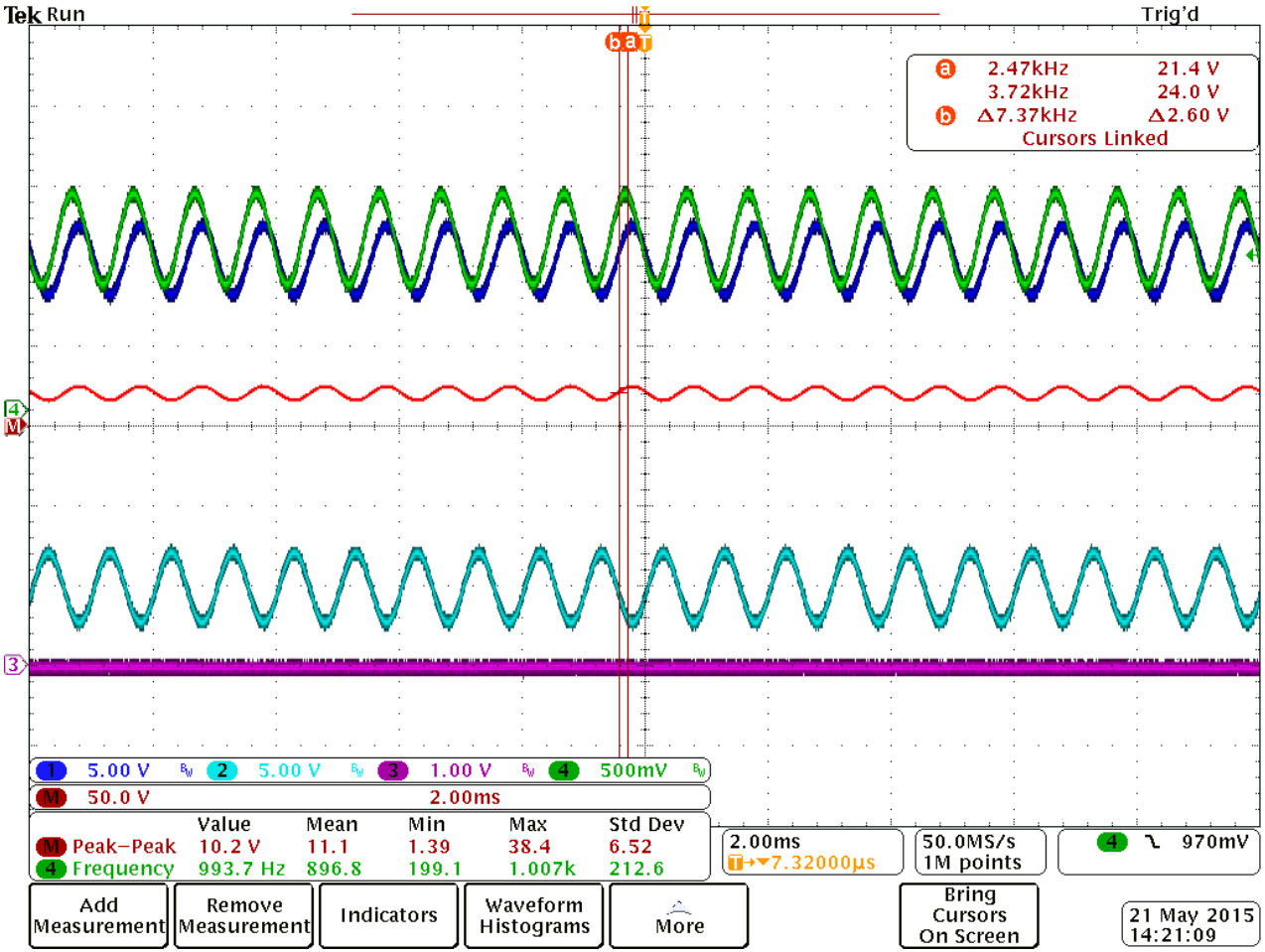

Ch 1 out+
Ch 2 out-
Ch 4 Vin
M out+ - out-

No visible distortion
~45 phase shift

Performance over power supply voltage

- In conversations with the company I was told that you could lower the power supply voltage and reduce the output range. This is true however there is a +10 V and -2V reference circuit that does not go into regulation until the power supply voltage is above 22V. Gain is lowered at at lower supply voltage and PS rejection is probably out the window.
- I will contact the company again but right now it looks like the boards will have to run off of the nominal 24 V supply. This will have some possible impact on the circuit design and safety review.

Drive circuit

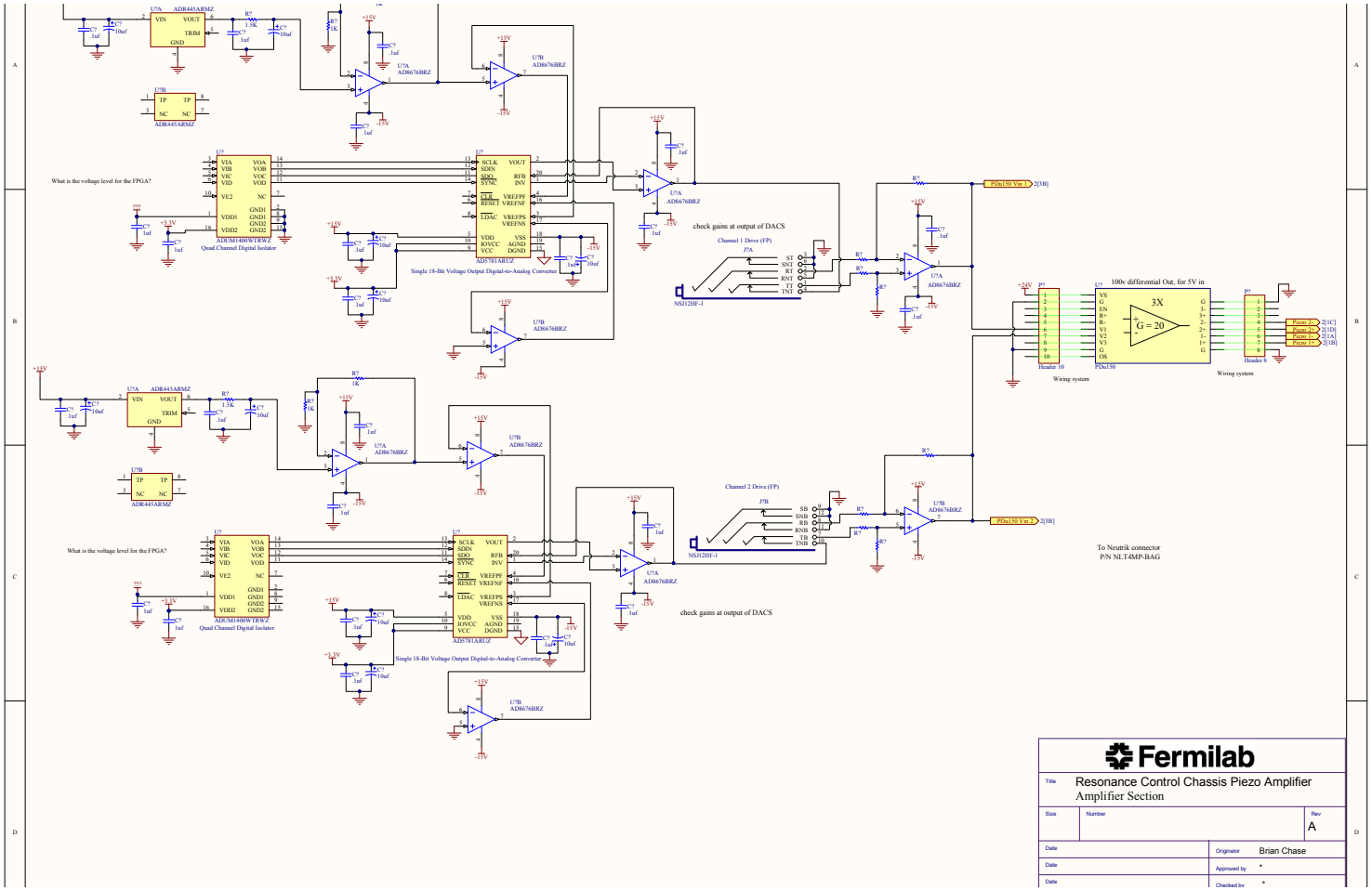

Monitor circuit

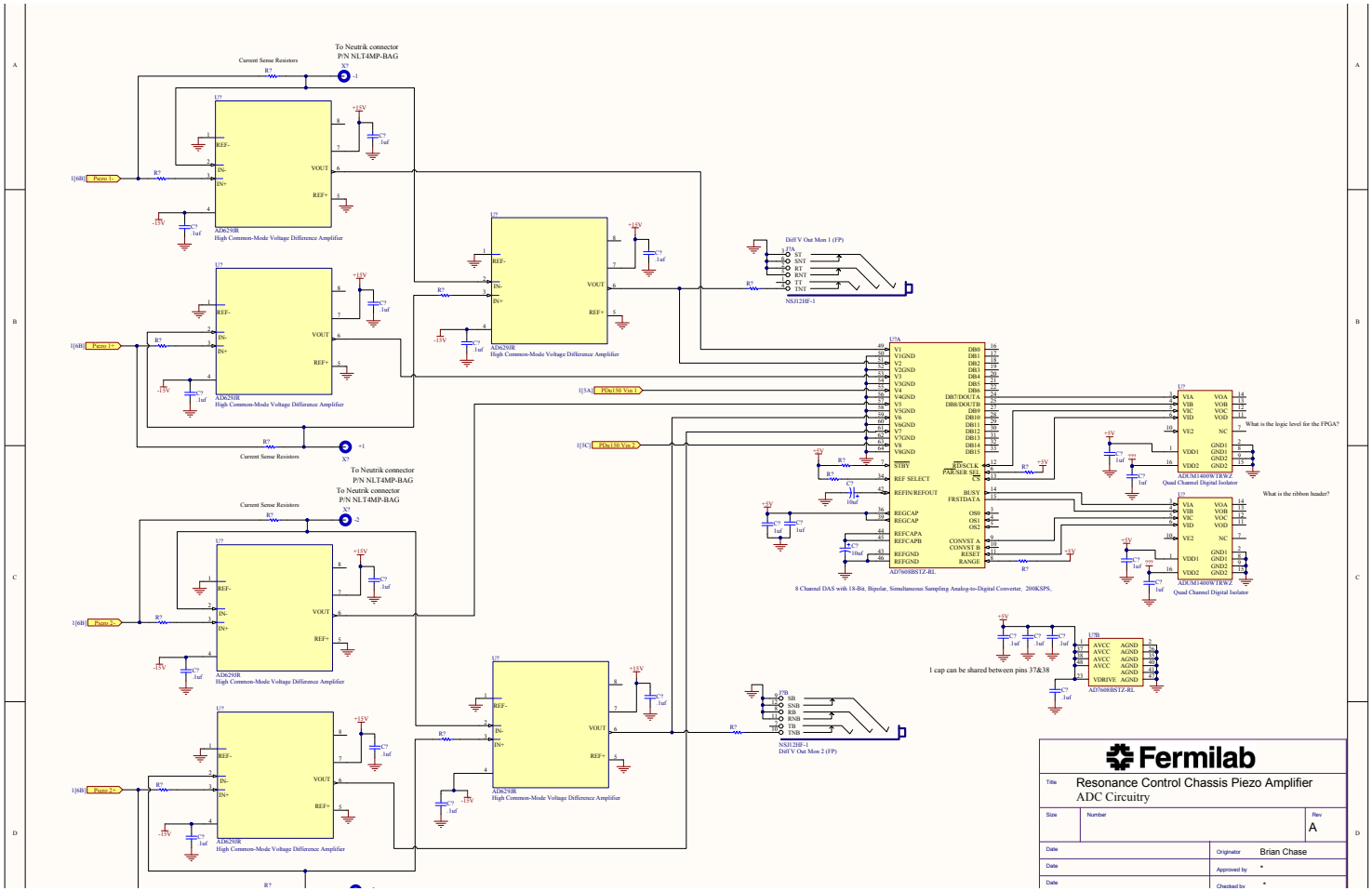

Response from Piezo Drive

- Hi Brian,
- Yes, the internal offset source will not work if you reduce the supply voltage, however, everything else will work.
- If you wish, we can make a modification to reduce the output voltage range, to 120V for example.
- The output resistance is optimized for noise performance rather than bandwidth. We could increase the signal bandwidth but note that noise is proportional to sqrt(Bandwidth), so doubling the signal bandwidth would increase the RMS noise by sqrt(2), which may not be an issue given the very low baseline noise. If you have a target signal bandwidth, we can design for that.
- In regards to high volumes, we have a 40% discount for >100 units and 30% for >20 units.
- Regards,
- AF

questions

- • What voltage do we want to run the SPI at? I am using isolation chips so I can be flexible. 3.3V or 5V would be fine.

- • In addition to SPI I would like to have one control line per amp board for an enable bit. Same voltage as SPI.

- • Do you have any slick ribbon cable/ connector suggestions? Good old fashion ribbon should work with alternate signal and grounds.

- • Has there been any progress on chassis selection yet?

Next tests

- Noise and spectral measurements with DC block
- 2 & 3 channel operation
- Increase load capacitance to 2, 3, and 4 uF
- Small signal tests at several frequencies – maybe NA plots if I can put my hands on a low frequency NA.
- Do some modeling using data