# APEX Photo-Cathode RF Cavity
# RF System Block Diagram
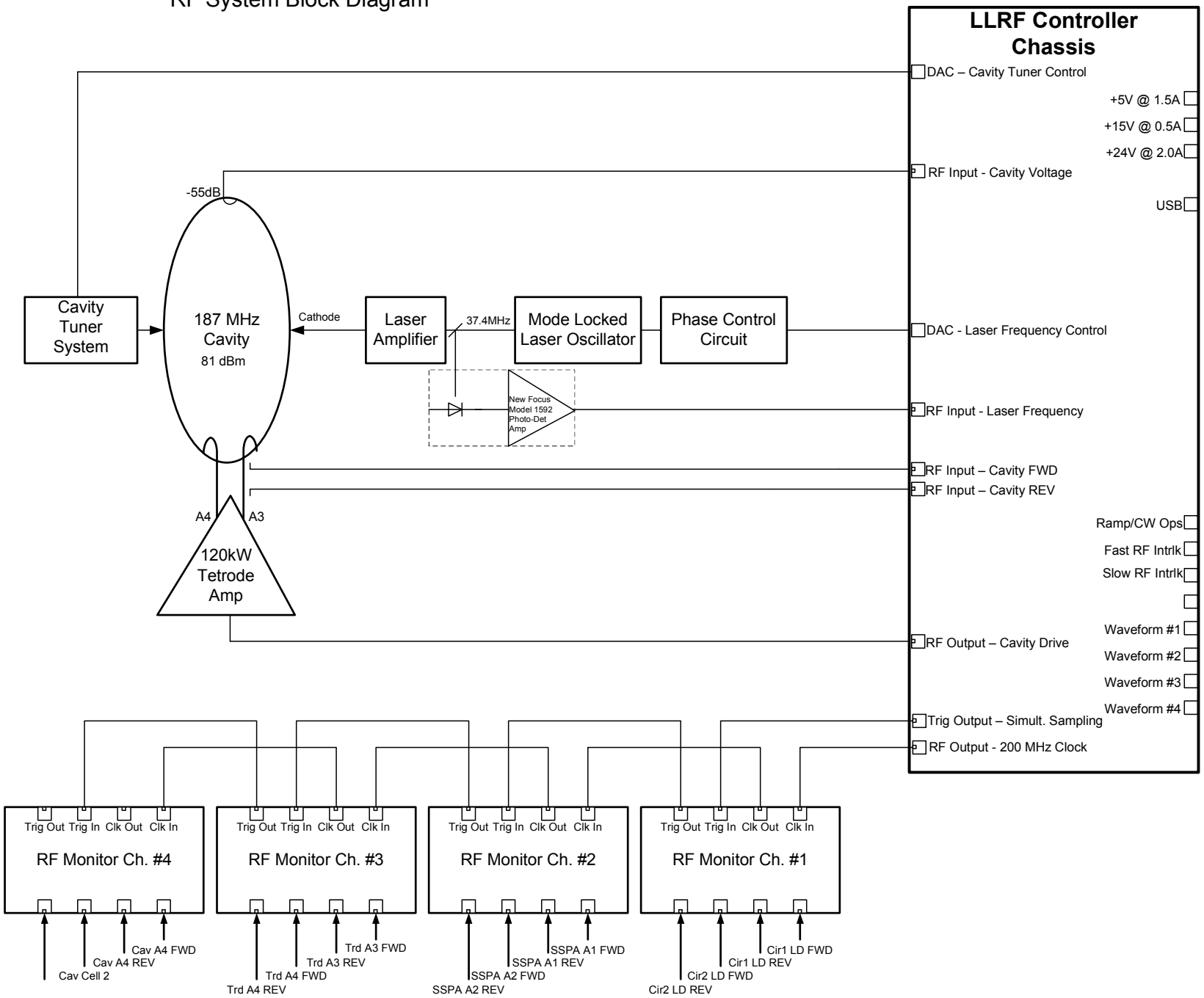
K. Baptiste 01-28-2010 rev. 0