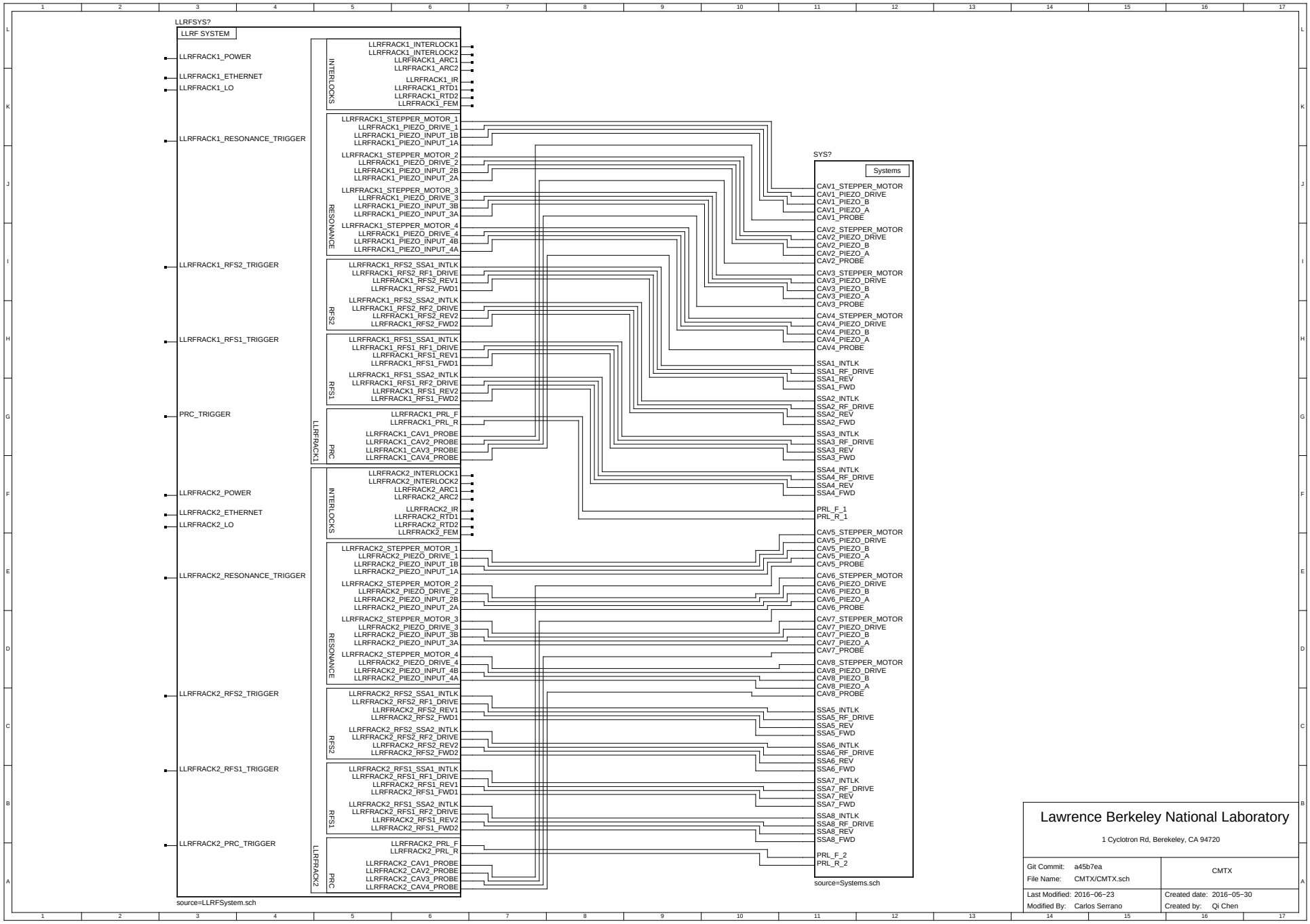
LLRFSYS?
LLRF SYSTEM
LLRFRACK1_POWER
LLRFRACK1_ETHERNET
LLRFRACK1_LO
LLRFRACK1_RESONANCE_TRIGGER
LLRFRACK1_RFS2_TRIGGER
LLRFRACK1_RFS1_TRIGGER
PRC_TRIGGER
LLRFRACK2_POWER
LLRFRACK2_ETHERNET
LLRFRACK2_LO
LLRFRACK2_RESONANCE_TRIGGER
LLRFRACK2_RFS2_TRIGGER
LLRFRACK2_RFS1_TRIGGER
LLRFRACK2_PRC_TRIGGER
LLRFRACK1
INTERLOCKS
LLRFRACK1_INTERLOCK1
LLRFRACK1_INTERLOCK2
LLRFRACK1_ARC1
LLRFRACK1_ARC2
LLRFRACK1_IR
LLRFRACK1_RTD1
LLRFRACK1_RTD2
LLRFRACK1_FEM
RESONANCE
LLRFRACK1_STEPPER_MOTOR_1
LLRFRACK1_PIEZO_DRIVE_1
LLRFRACK1_PIEZO_INPUT_1B
LLRFRACK1_PIEZO_INPUT_1A
LLRFRACK1_STEPPER_MOTOR_2
LLRFRACK1_PIEZO_DRIVE_2
LLRFRACK1_PIEZO_INPUT_2B
LLRFRACK1_PIEZO_INPUT_2A
LLRFRACK1_STEPPER_MOTOR_3
LLRFRACK1_PIEZO_DRIVE_3
LLRFRACK1_PIEZO_INPUT_3B
LLRFRACK1_PIEZO_INPUT_3A
LLRFRACK1_STEPPER_MOTOR_4
LLRFRACK1_PIEZO_DRIVE_4
LLRFRACK1_PIEZO_INPUT_4B
LLRFRACK1_PIEZO_INPUT_4A
RFS2
LLRFRACK1_RFS2_SSA1_INTLK
LLRFRACK1_RFS2_RF1_DRIVE
LLRFRACK1_RFS2_REV1
LLRFRACK1_RFS2_FWD1
LLRFRACK1_RFS2_SSA2_INTLK
LLRFRACK1_RFS2_RF2_DRIVE
LLRFRACK1_RFS2_REV2
LLRFRACK1_RFS2_FWD2
RFS1
LLRFRACK1_RFS1_SSA1_INTLK
LLRFRACK1_RFS1_RF1_DRIVE
LLRFRACK1_RFS1_REV1
LLRFRACK1_RFS1_FWD1
LLRFRACK1_RFS1_SSA2_INTLK
LLRFRACK1_RFS1_RF2_DRIVE
LLRFRACK1_RFS1_REV2
LLRFRACK1_RFS1_FWD2
PRC
LLRFRACK1_PRL_F
LLRFRACK1_PRL_R
LLRFRACK1_CAV1_PROBE
LLRFRACK1_CAV2_PROBE
LLRFRACK1_CAV3_PROBE
LLRFRACK1_CAV4_PROBE
LLRFRACK2
INTERLOCKS
LLRFRACK2_INTERLOCK1
LLRFRACK2_INTERLOCK2
LLRFRACK2_ARC1
LLRFRACK2_ARC2
LLRFRACK2_IR
LLRFRACK2_RTD1
LLRFRACK2_RTD2
LLRFRACK2_FEM
RESONANCE
LLRFRACK2_STEPPER_MOTOR_1
LLRFRACK2_PIEZO_DRIVE_1
LLRFRACK2_PIEZO_INPUT_1B
LLRFRACK2_PIEZO_INPUT_1A
LLRFRACK2_STEPPER_MOTOR_2
LLRFRACK2_PIEZO_DRIVE_2
LLRFRACK2_PIEZO_INPUT_2B
LLRFRACK2_PIEZO_INPUT_2A
LLRFRACK2_STEPPER_MOTOR_3
LLRFRACK2_PIEZO_DRIVE_3
LLRFRACK2_PIEZO_INPUT_3B
LLRFRACK2_PIEZO_INPUT_3A
LLRFRACK2_STEPPER_MOTOR_4
LLRFRACK2_PIEZO_DRIVE_4
LLRFRACK2_PIEZO_INPUT_4B
LLRFRACK2_PIEZO_INPUT_4A
RFS2
LLRFRACK2_RFS2_SSA1_INTLK
LLRFRACK2_RFS2_RF1_DRIVE
LLRFRACK2_RFS2_REV1
LLRFRACK2_RFS2_FWD1
LLRFRACK2_RFS2_SSA2_INTLK
LLRFRACK2_RFS2_RF2_DRIVE
LLRFRACK2_RFS2_REV2
LLRFRACK2_RFS2_FWD2
RFS1
LLRFRACK2_RFS1_SSA1_INTLK
LLRFRACK2_RFS1_RF1_DRIVE
LLRFRACK2_RFS1_REV1
LLRFRACK2_RFS1_FWD1
LLRFRACK2_RFS1_SSA2_INTLK
LLRFRACK2_RFS1_RF2_DRIVE
LLRFRACK2_RFS1_REV2
LLRFRACK2_RFS1_FWD2
PRC
LLRFRACK2_PRL_F
LLRFRACK2_PRL_R
LLRFRACK2_CAV1_PROBE
LLRFRACK2_CAV2_PROBE
LLRFRACK2_CAV3_PROBE
LLRFRACK2_CAV4_PROBE
source=LLRFSystem.sch
SYS?
Systems
CAV1_STEPPER_MOTOR
CAV1_PIEZO_DRIVE
CAV1_PIEZO_B
CAV1_PIEZO_A
CAV1_PROBE
CAV2_STEPPER_MOTOR
CAV2_PIEZO_DRIVE
CAV2_PIEZO_B
CAV2_PIEZO_A
CAV2_PROBE
CAV3_STEPPER_MOTOR
CAV3_PIEZO_DRIVE
CAV3_PIEZO_B
CAV3_PIEZO_A
CAV3_PROBE
CAV4_STEPPER_MOTOR
CAV4_PIEZO_DRIVE
CAV4_PIEZO_B
CAV4_PIEZO_A
CAV4_PROBE
SSA1_INTLK
SSA1_RF_DRIVE
SSA1_REV
SSA1_FWD
SSA2_INTLK
SSA2_RF_DRIVE
SSA2_REV
SSA2_FWD
SSA3_INTLK
SSA3_RF_DRIVE
SSA3_REV
SSA3_FWD
SSA4_INTLK
SSA4_RF_DRIVE
SSA4_REV
SSA4_FWD
PRL_F_1
PRL_R_1
CAV5_STEPPER_MOTOR
CAV5_PIEZO_DRIVE
CAV5_PIEZO_B
CAV5_PIEZO_A
CAV5_PROBE
CAV6_STEPPER_MOTOR
CAV6_PIEZO_DRIVE
CAV6_PIEZO_B
CAV6_PIEZO_A
CAV6_PROBE
CAV7_STEPPER_MOTOR
CAV7_PIEZO_DRIVE
CAV7_PIEZO_B
CAV7_PIEZO_A
CAV7_PROBE
CAV8_STEPPER_MOTOR
CAV8_PIEZO_DRIVE
CAV8_PIEZO_B
CAV8_PIEZO_A
CAV8_PROBE
SSA5_INTLK
SSA5_RF_DRIVE
SSA5_REV
SSA5_FWD
SSA6_INTLK
SSA6_RF_DRIVE
SSA6_REV
SSA6_FWD
SSA7_INTLK
SSA7_RF_DRIVE
SSA7_REV
SSA7_FWD
SSA8_INTLK
SSA8_RF_DRIVE
SSA8_REV
SSA8_FWD
PRL_F_2
PRL_R_2
source=Systems.sch
Lawrence Berkeley National Laboratory
1 Cyclotron Rd, Berekeley, CA 94720
Git Commit: a45b7ea
File Name: CMTX/CMTX.sch
CMTX
Last Modified: 2016−06−23
Modified By: Carlos Serrano
Created date: 2016−05−30
Created by: Qi Chen

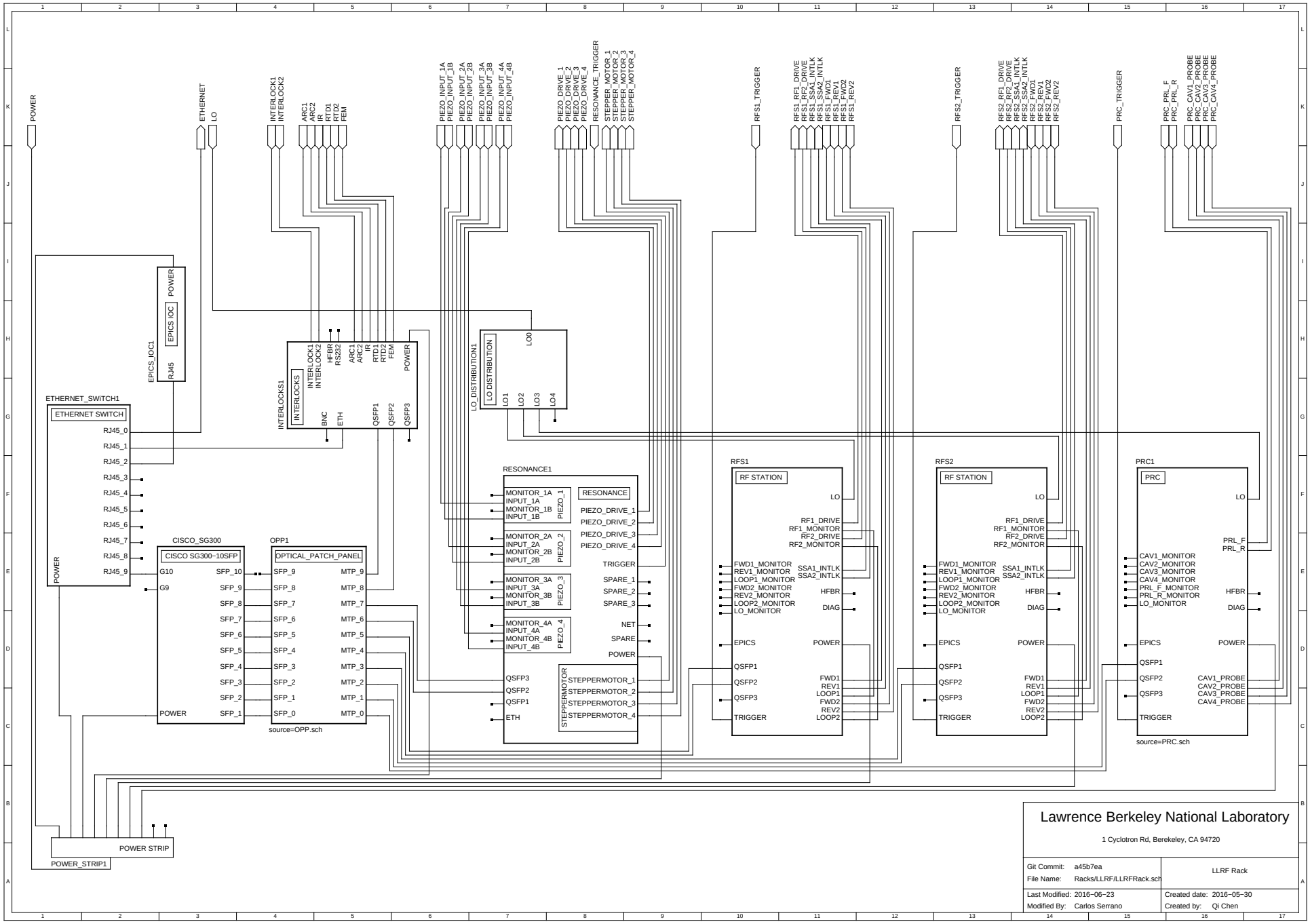

Lawrence Berkeley National Laboratory

1 Cyclotron Rd, Berekeley, CA 94720

Git Commit: a45b7ea	LLRF Rack
File Name: Racks/LLRF/LLRFRack.sch	
Last Modified: 2016−06−23	Created date: 2016−05−30
Modified By: Carlos Serrano	Created by: Qi Chen

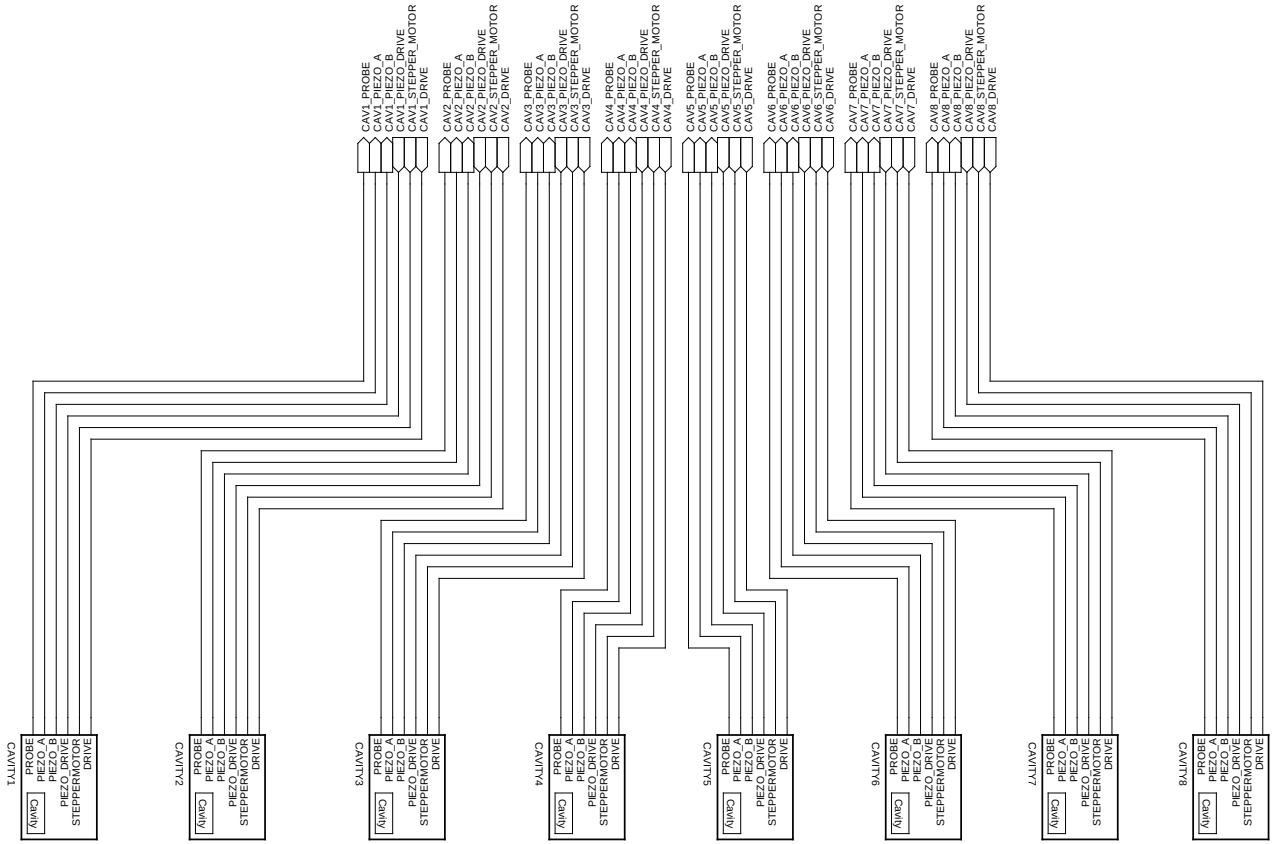

Lawrence Berkeley National Laboratory

1 Cyclotron Rd, Berekeley, CA 94720

Git Commit: a45b7ea File Name: Racks/CM/Cryomodule.sch	CRYOMODULE
Last Modified: 2016−06−23 Modified By: Carlos Serrano	Created date: 2016−06−08 Created by: Carlos Serrano

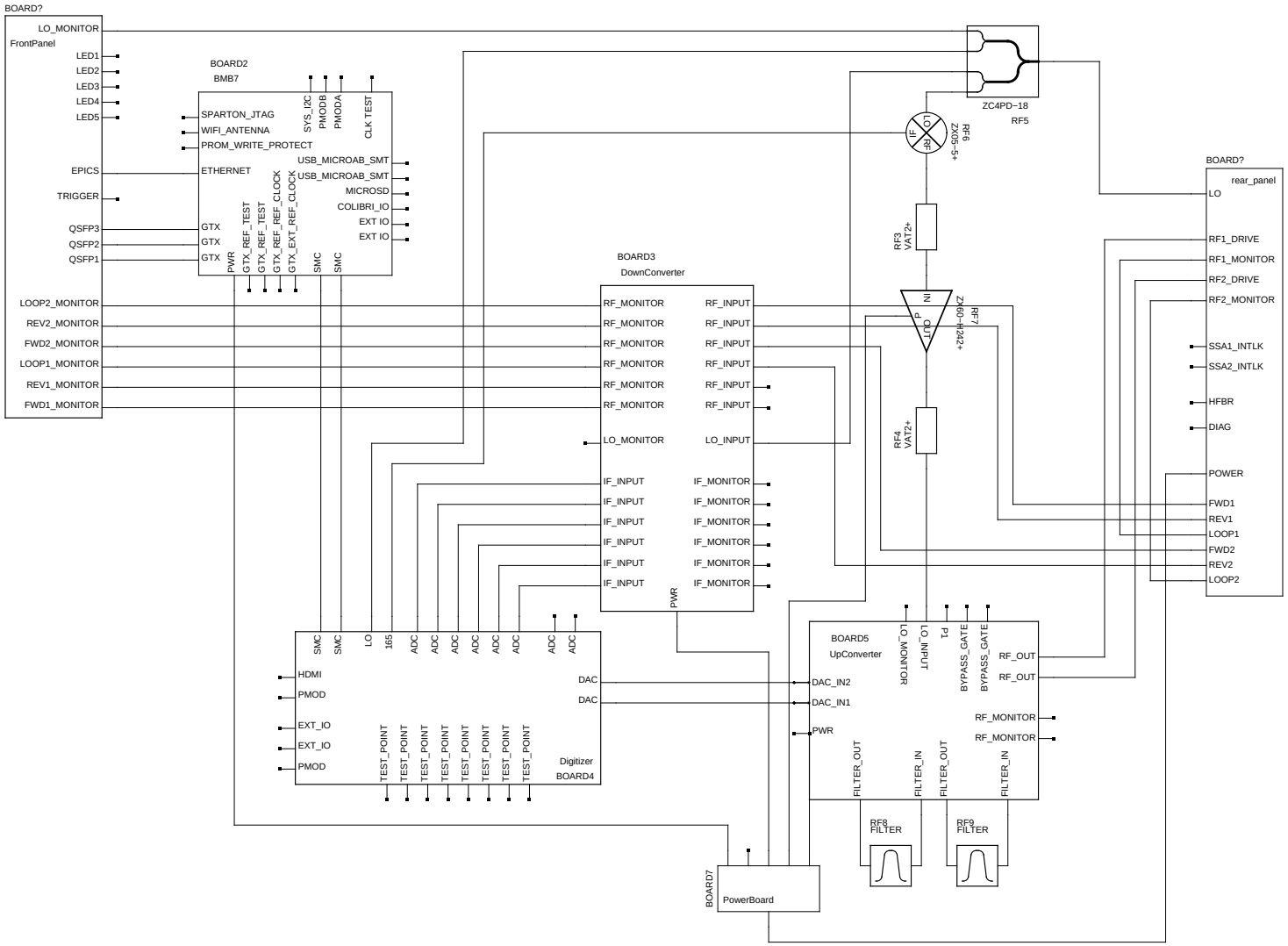

Lawrence Berkeley National Laboratory

1 Cyclotron Rd, Berekeley, CA 94720

Git Commit: fe7f733 File Name: Chassis/RFS/RFS.sch	RFS
Last Modified: 2016−06−23 Modified By: Carlos Serrano	Created date: 2016−06−08 Created by: Carlos Serrano

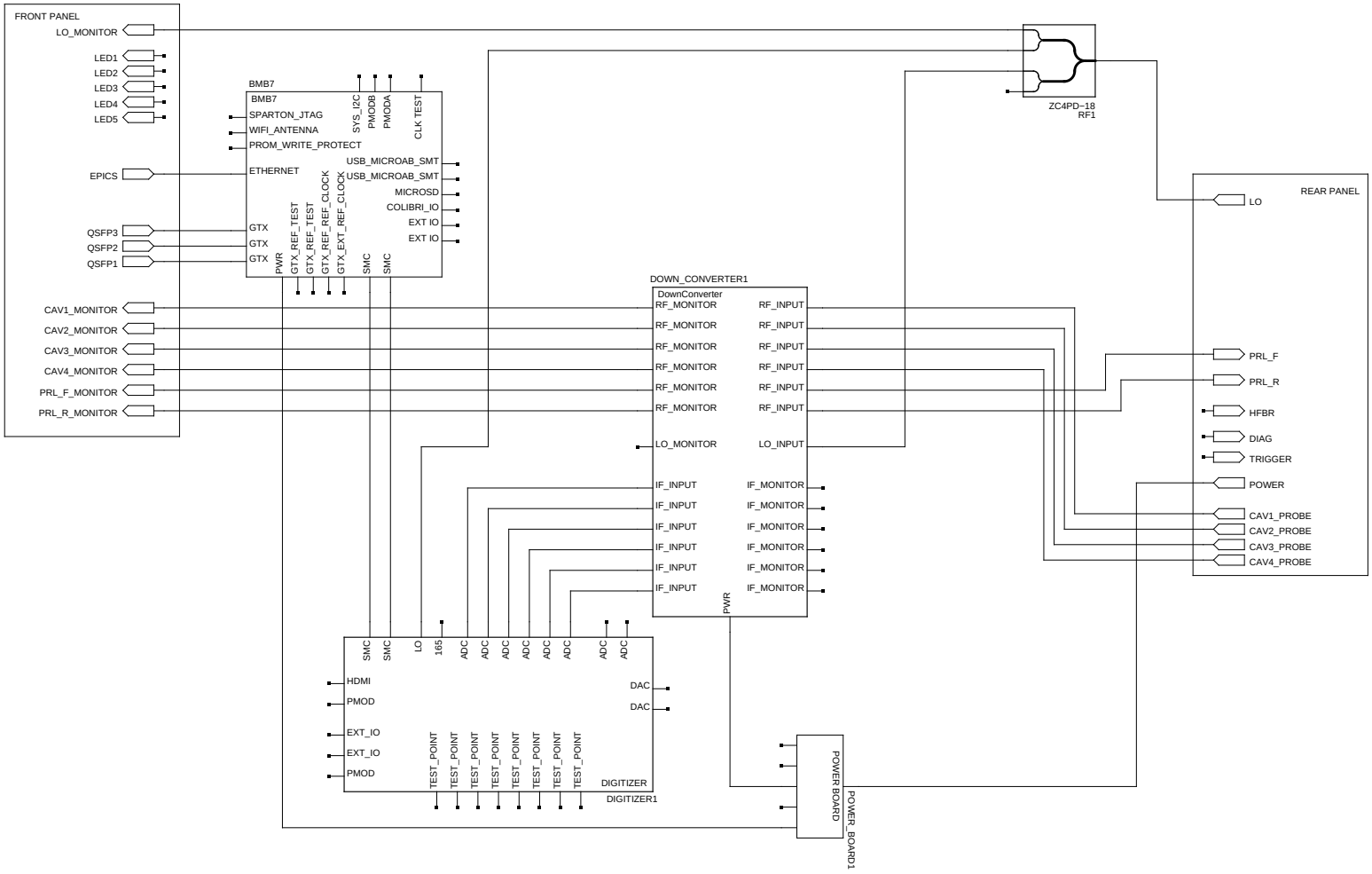

Lawrence Berkeley National Laboratory

1 Cyclotron Rd, Berekeley, CA 94720

Git Commit: a45b7ea File Name: Chassis/PRC/PRC.sch	PRC
Last Modified: 2016−06−23 Modified By: Carlos Serrano	Created date: 2016−02−22 Created by: Qi Chen

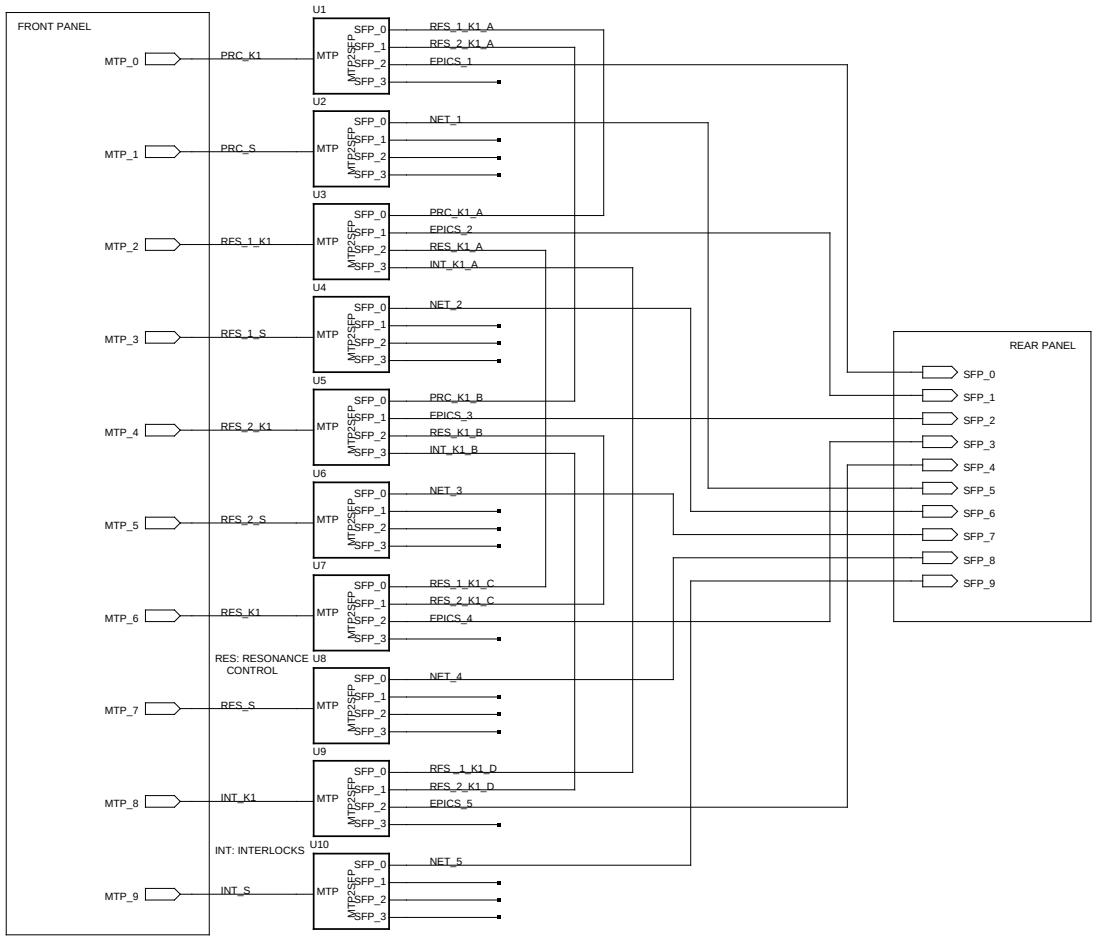

Lawrence Berkeley National Laboratory

1 Cyclotron Rd, Berekeley, CA 94720

Git Commit: a45b7ea File Name: Chassis/OPP/OPP.sch	OPTICAL PATCH PANEL
Last Modified: 2016−06−23 Modified By: Carlos Serrano	Created date: 2016−06−08 Created by: Carlos Serrano